Electrical scheme
Mazda 3 - 2014 hatchback

DavX

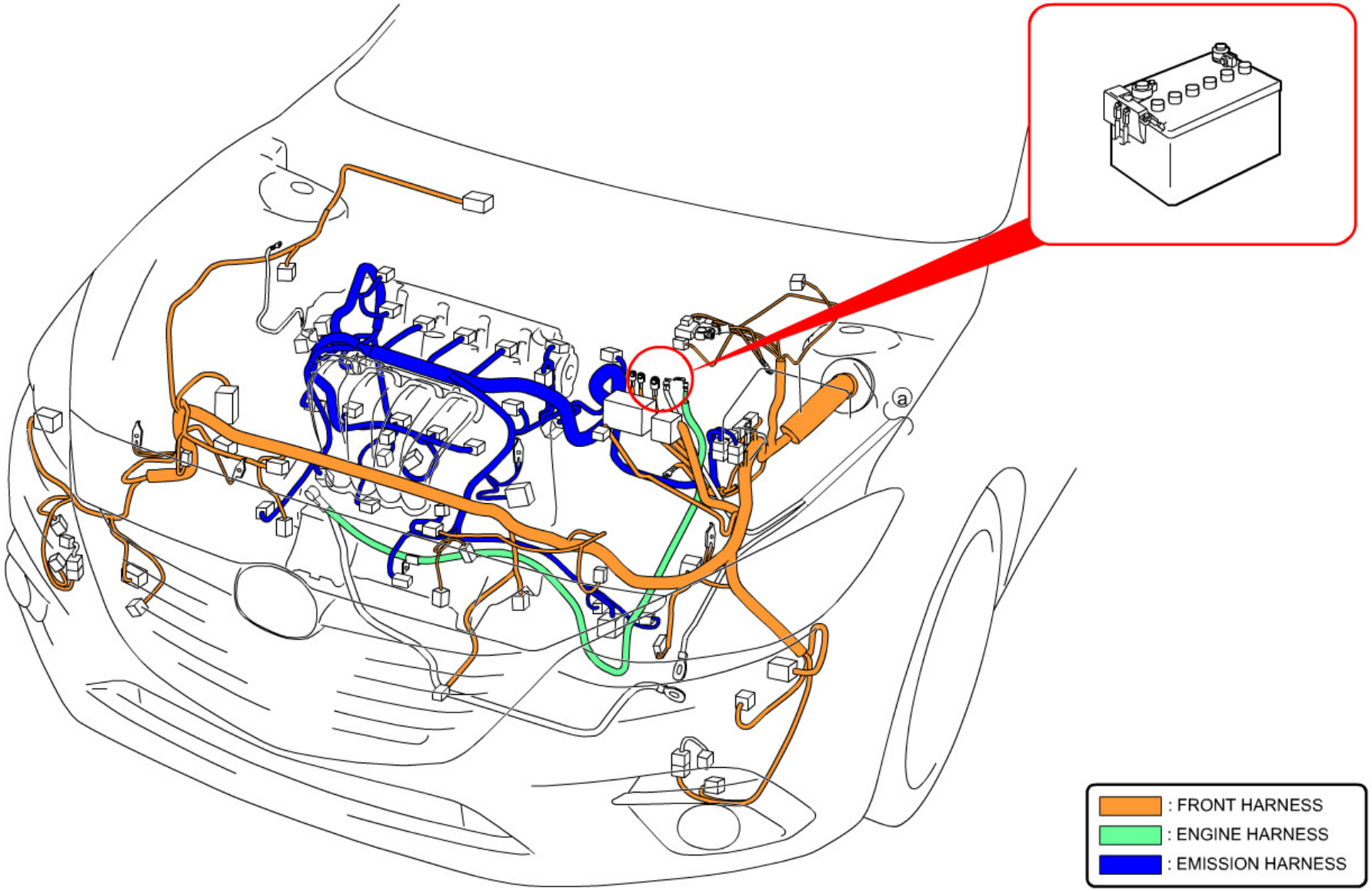
: FRONT HARNESS
: ENGINE HARNESS
: EMISSION HARNESS

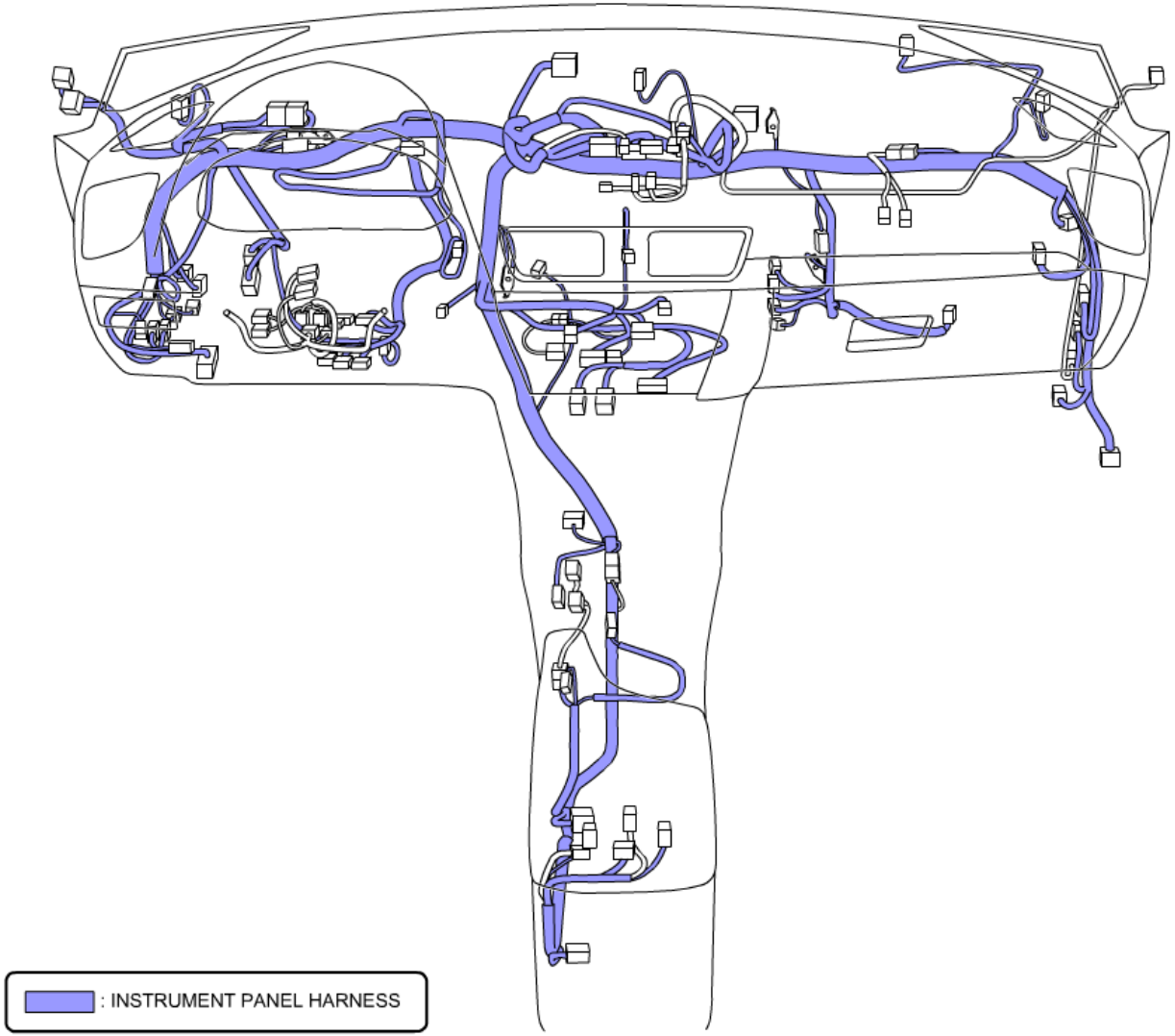
: INSTRUMENT PANEL HARNESS

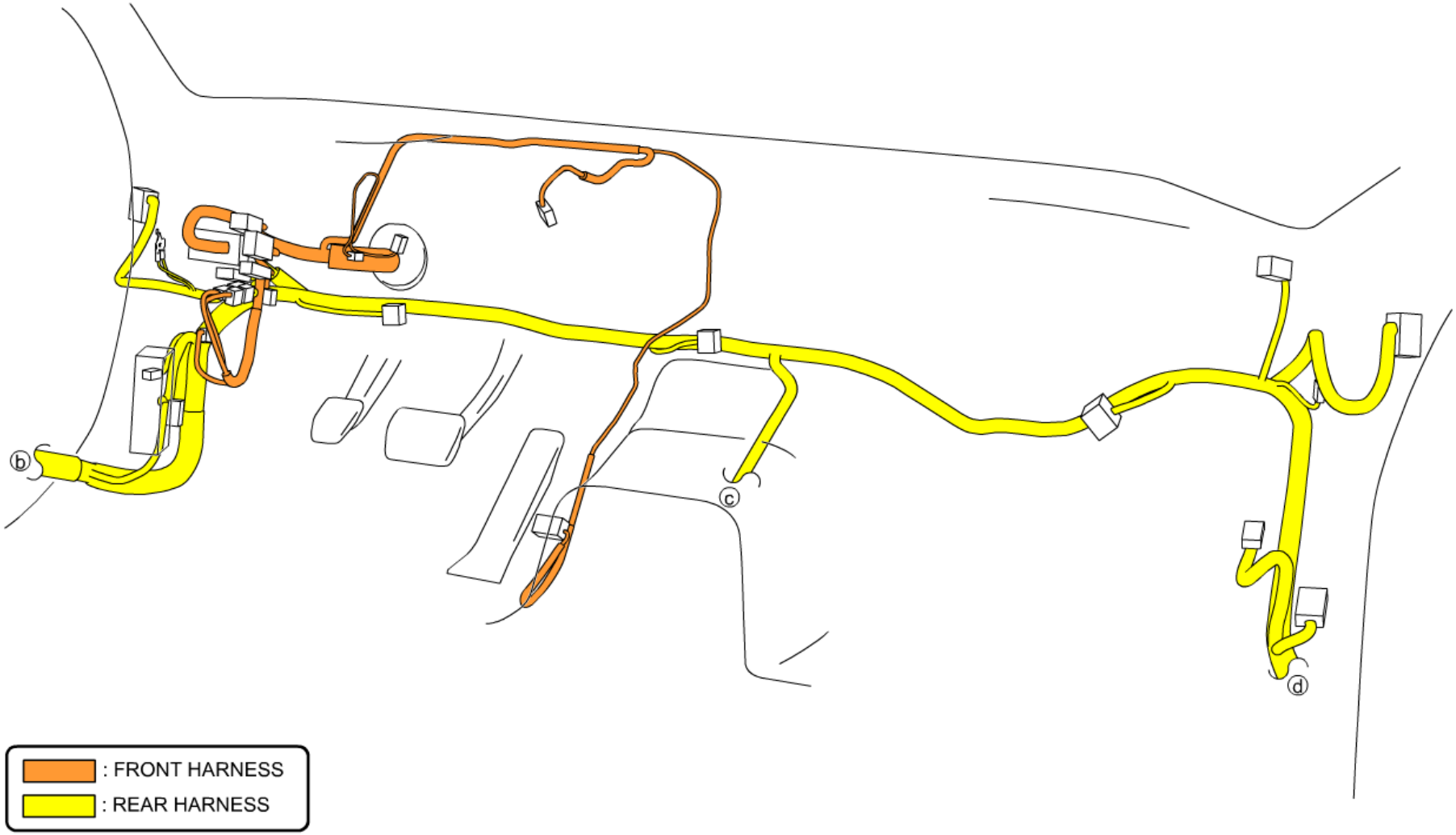
ⓑ
ⓒ
ⓓ
: FRONT HARNESS
: REAR HARNESS

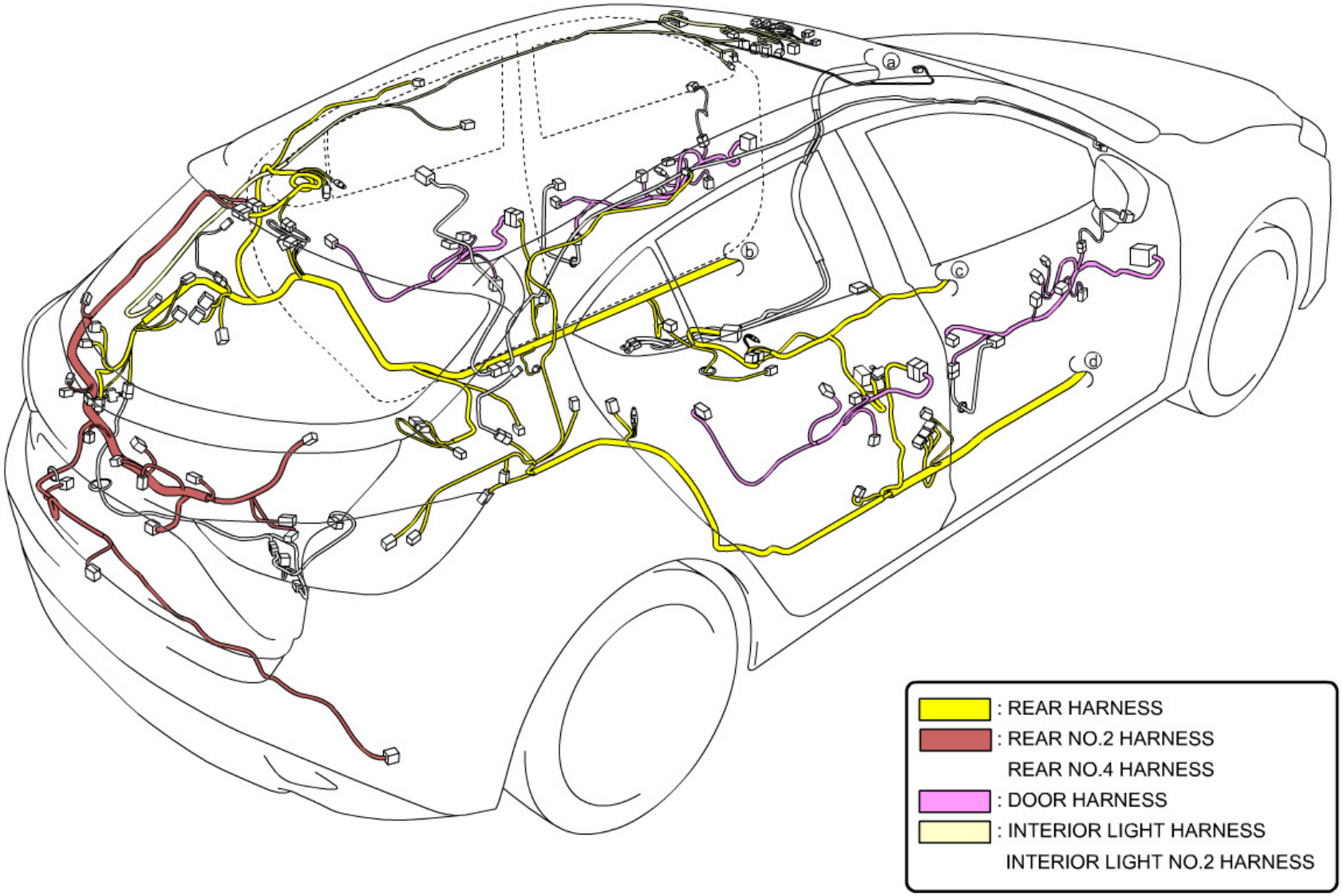
a
b
c
d
: REAR HARNESS
: REAR NO.2 HARNESS
REAR NO.4 HARNESS
: DOOR HARNESS
: INTERIOR LIGHT HARNESS
INTERIOR LIGHT NO.2 HARNESS

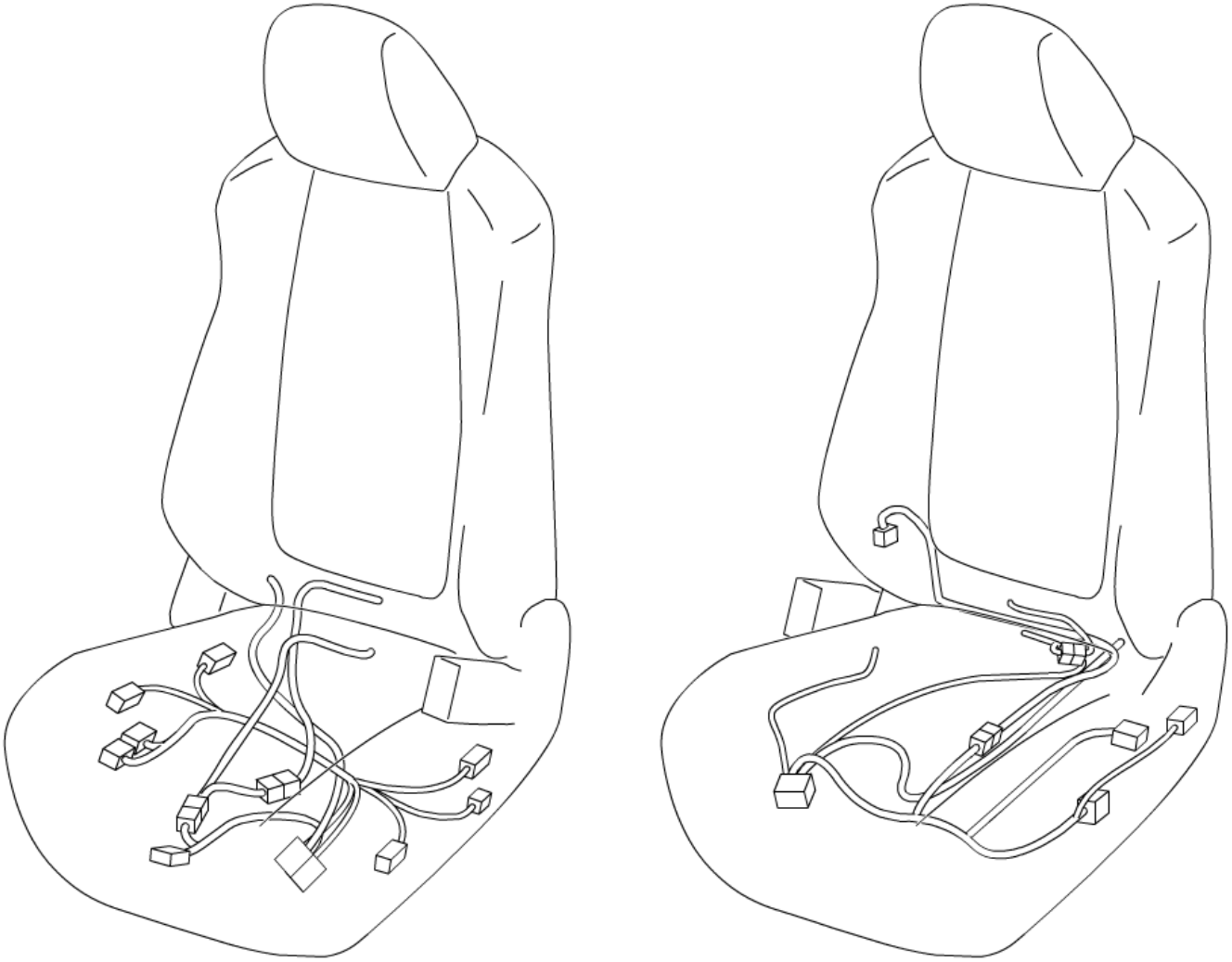

ELECTRICAL WIRING SCHEMATIC

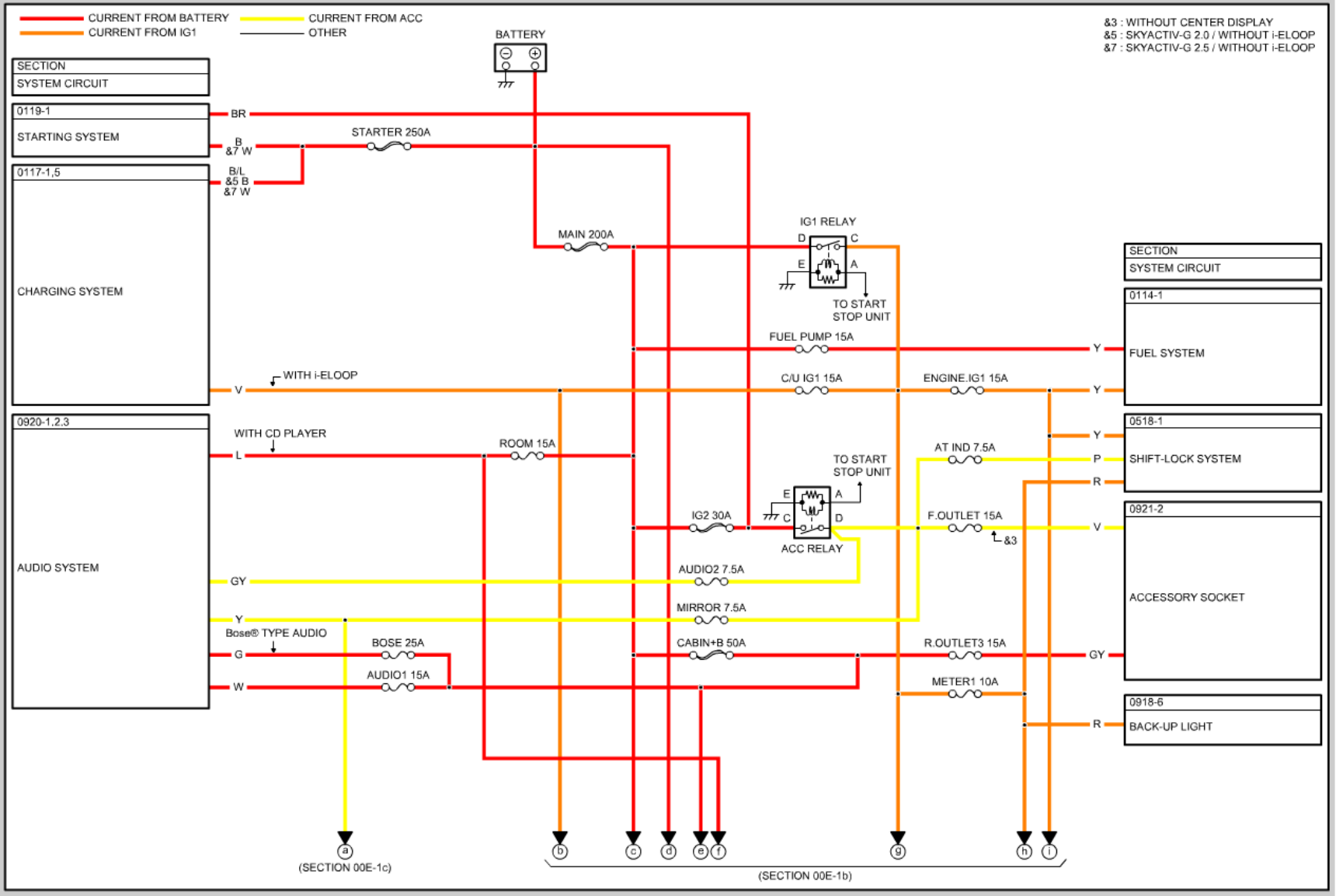

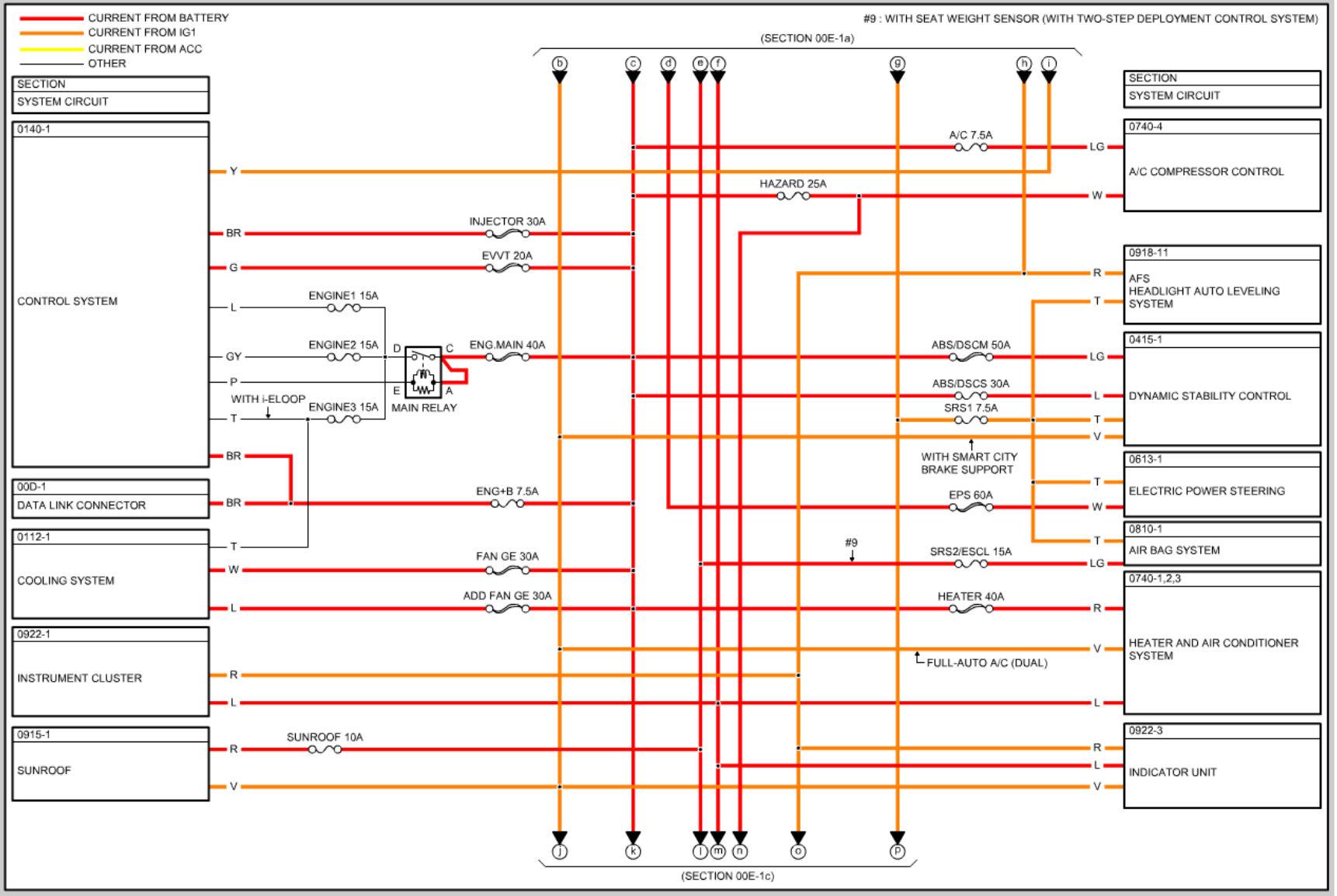
CURRENT FROM BATTERY
CURRENT FROM IG1
CURRENT FROM ACC
OTHER
#9 : WITH SEAT WEIGHT SENSOR (WITH TWO-STEP DEPLOYMENT CONTROL SYSTEM)
(SECTION 00E-1a)
(SECTION 00E-1c)
SECTION
SYSTEM CIRCUIT
0140-1
CONTROL SYSTEM
00D-1
DATA LINK CONNECTOR
0112-1
COOLING SYSTEM
0922-1
INSTRUMENT CLUSTER
0915-1
SUNROOF
INJECTOR 30A
EVVT 20A
ENGINE1 15A
ENGINE2 15A
ENGINE3 15A
ENG.MAIN 40A
MAIN RELAY
WITH i-ELOOP
ENG+B 7.5A
FAN GE 30A
ADD FAN GE 30A
SUNROOF 10A
A/C 7.5A
HAZARD 25A
ABS/DSCM 50A
ABS/DSCS 30A
SRS1 7.5A
WITH SMART CITY BRAKE SUPPORT
EPS 60A
#9
SRS2/ESCL 15A
HEATER 40A
FULL-AUTO A/C (DUAL)
0740-4
A/C COMPRESSOR CONTROL
0918-11
AFS HEADLIGHT AUTO LEVELING SYSTEM
0415-1
DYNAMIC STABILITY CONTROL
0613-1
ELECTRIC POWER STEERING
0810-1
AIR BAG SYSTEM
0740-1,2,3
HEATER AND AIR CONDITIONER SYSTEM
0922-3
INDICATOR UNIT

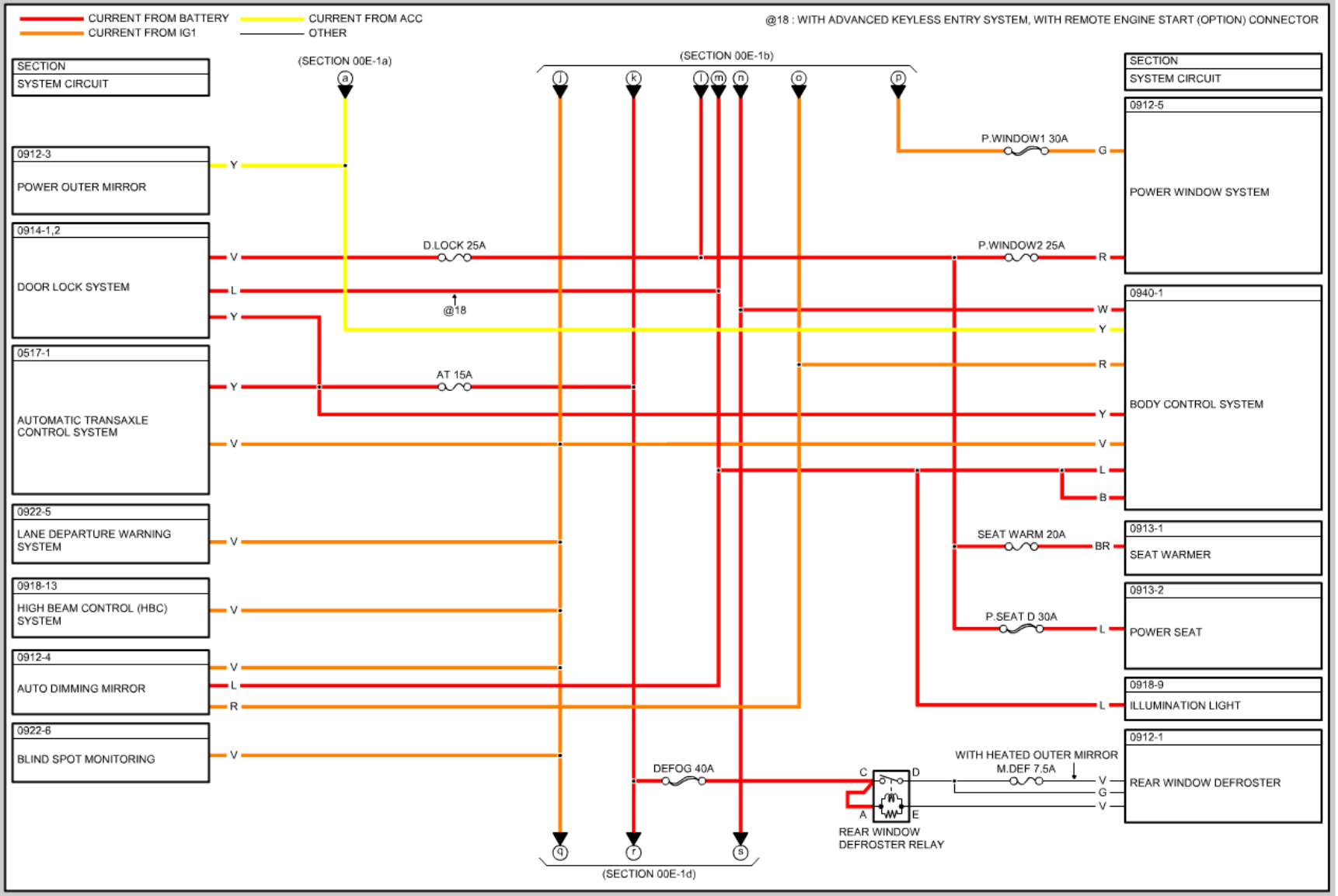
CURRENT FROM BATTERY
CURRENT FROM IG1
CURRENT FROM ACC
OTHER
@18 : WITH ADVANCED KEYLESS ENTRY SYSTEM, WITH REMOTE ENGINE START (OPTION) CONNECTOR
SECTION
SYSTEM CIRCUIT
(SECTION 00E-1a)
(SECTION 00E-1b)
(SECTION 00E-1d)
0912-3
POWER OUTER MIRROR
0914-1,2
DOOR LOCK SYSTEM
0517-1
AUTOMATIC TRANSAXLE CONTROL SYSTEM
0922-5
LANE DEPARTURE WARNING SYSTEM
0918-13
HIGH BEAM CONTROL (HBC) SYSTEM
0912-4
AUTO DIMMING MIRROR
0922-6
BLIND SPOT MONITORING
D.LOCK 25A
AT 15A
@18
DEFOG 40A
REAR WINDOW DEFROSTER RELAY
P.WINDOW1 30A
P.WINDOW2 25A
SEAT WARM 20A
P.SEAT D 30A
WITH HEATED OUTER MIRROR
M.DEF 7.5A
0912-5
POWER WINDOW SYSTEM
0940-1
BODY CONTROL SYSTEM
0913-1
SEAT WARMER
0913-2
POWER SEAT
0918-9
ILLUMINATION LIGHT
0912-1
REAR WINDOW DEFROSTER

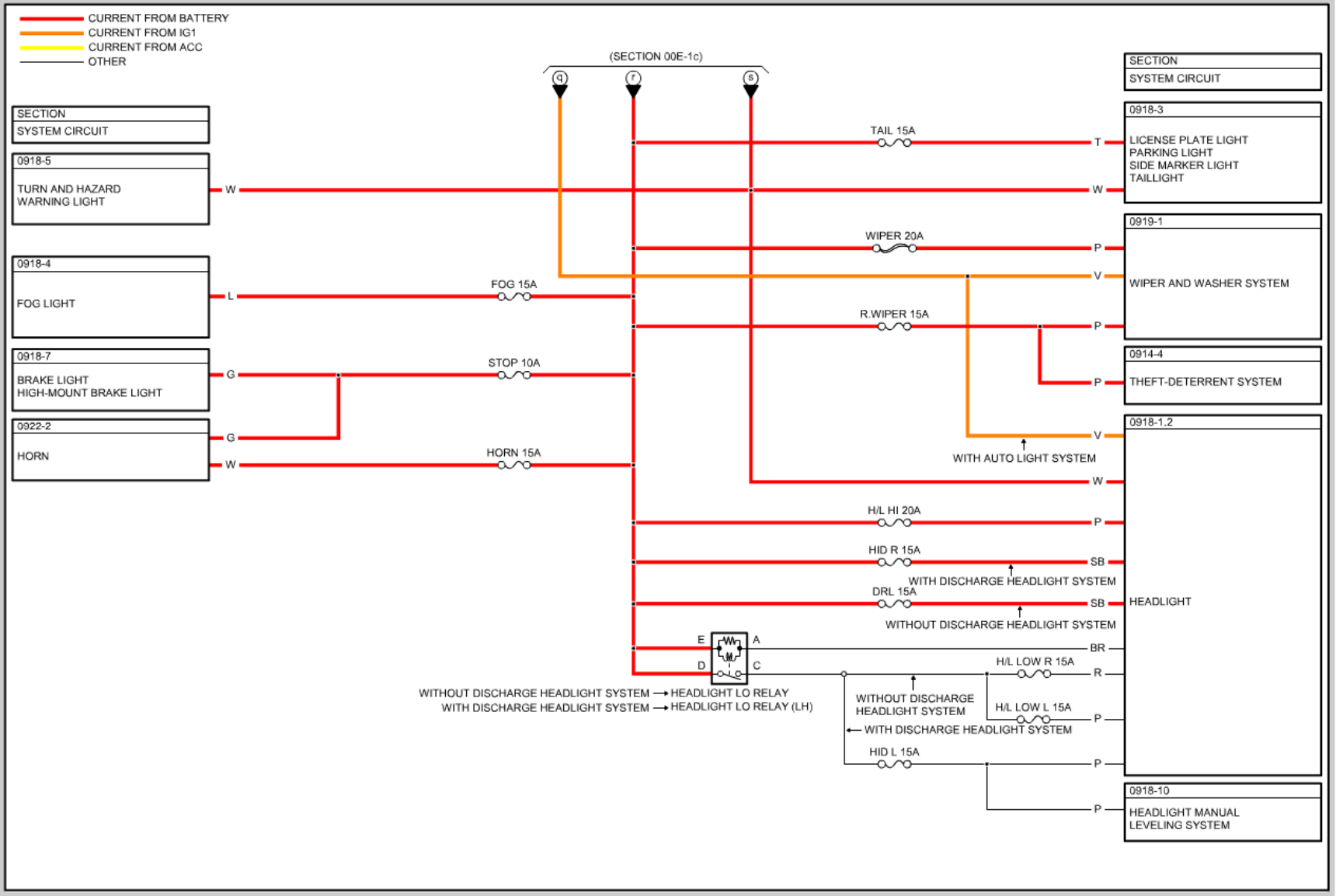
CURRENT FROM BATTERY
CURRENT FROM IG1
CURRENT FROM ACC
OTHER
(SECTION 00E-1c)
q
r
s
SECTION
SYSTEM CIRCUIT
0918-5
TURN AND HAZARD WARNING LIGHT
0918-4
FOG LIGHT
0918-7
BRAKE LIGHT
HIGH-MOUNT BRAKE LIGHT
0922-2
HORN
W
L
G
G
W
FOG 15A
STOP 10A
HORN 15A
TAIL 15A
WIPER 20A
R.WIPER 15A
H/L HI 20A
HID R 15A
DRL 15A
H/L LOW R 15A
H/L LOW L 15A
HID L 15A
T
W
P
V
P
P
V
W
P
SB
SB
BR
R
P
P
P
WITH AUTO LIGHT SYSTEM
WITH DISCHARGE HEADLIGHT SYSTEM
WITHOUT DISCHARGE HEADLIGHT SYSTEM
E
A
D
C
WITHOUT DISCHARGE HEADLIGHT SYSTEM → HEADLIGHT LO RELAY
WITH DISCHARGE HEADLIGHT SYSTEM → HEADLIGHT LO RELAY (LH)
WITHOUT DISCHARGE HEADLIGHT SYSTEM
WITH DISCHARGE HEADLIGHT SYSTEM
SECTION
SYSTEM CIRCUIT
0918-3
LICENSE PLATE LIGHT
PARKING LIGHT
SIDE MARKER LIGHT
TAILLIGHT
0919-1
WIPER AND WASHER SYSTEM
0914-4
THEFT-DETERRENT SYSTEM
0918-1,2
HEADLIGHT
0918-10
HEADLIGHT MANUAL LEVELING SYSTEM

MouseOver area below for zoomed connector view.

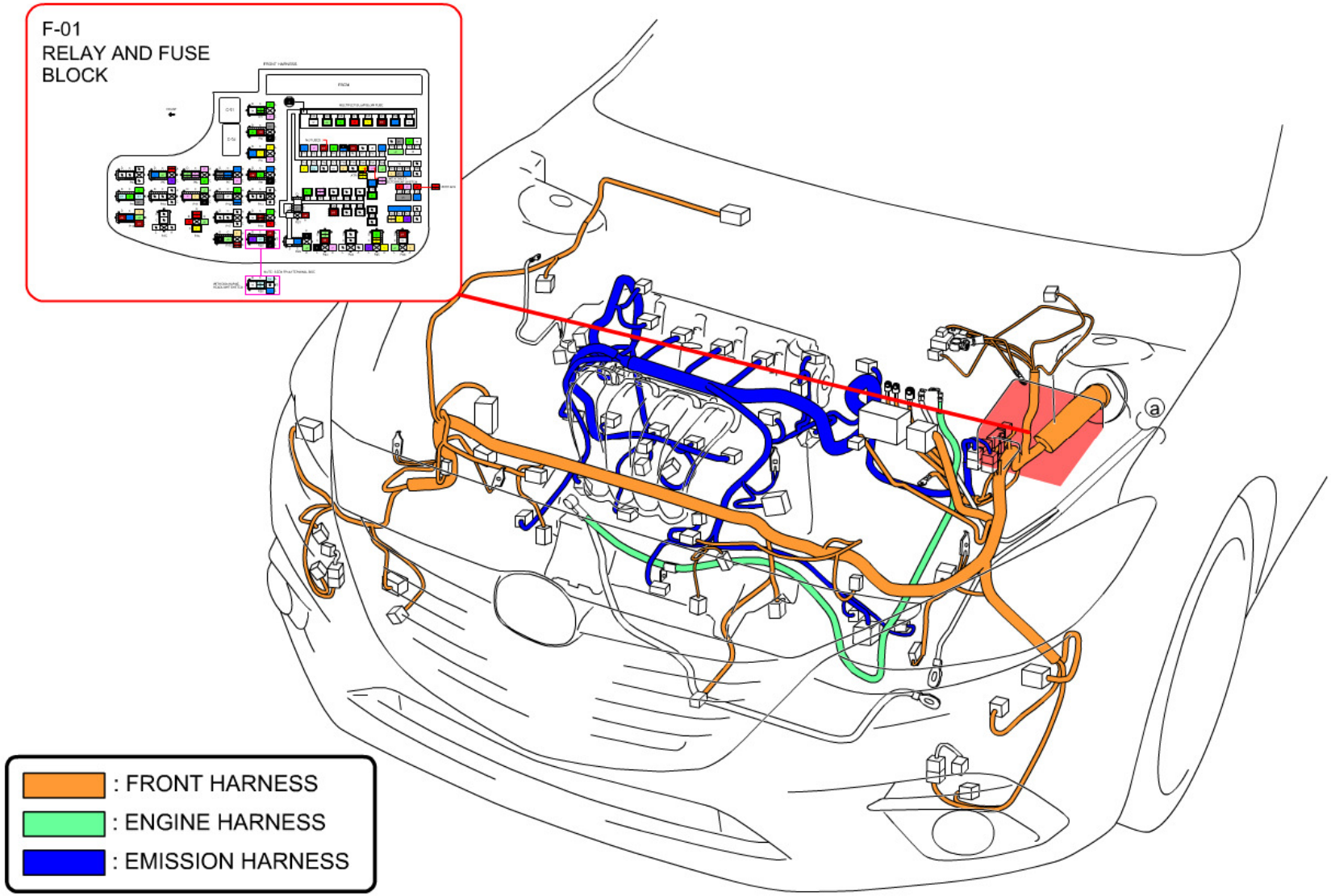

MouseOver area below for zoomed connector view.

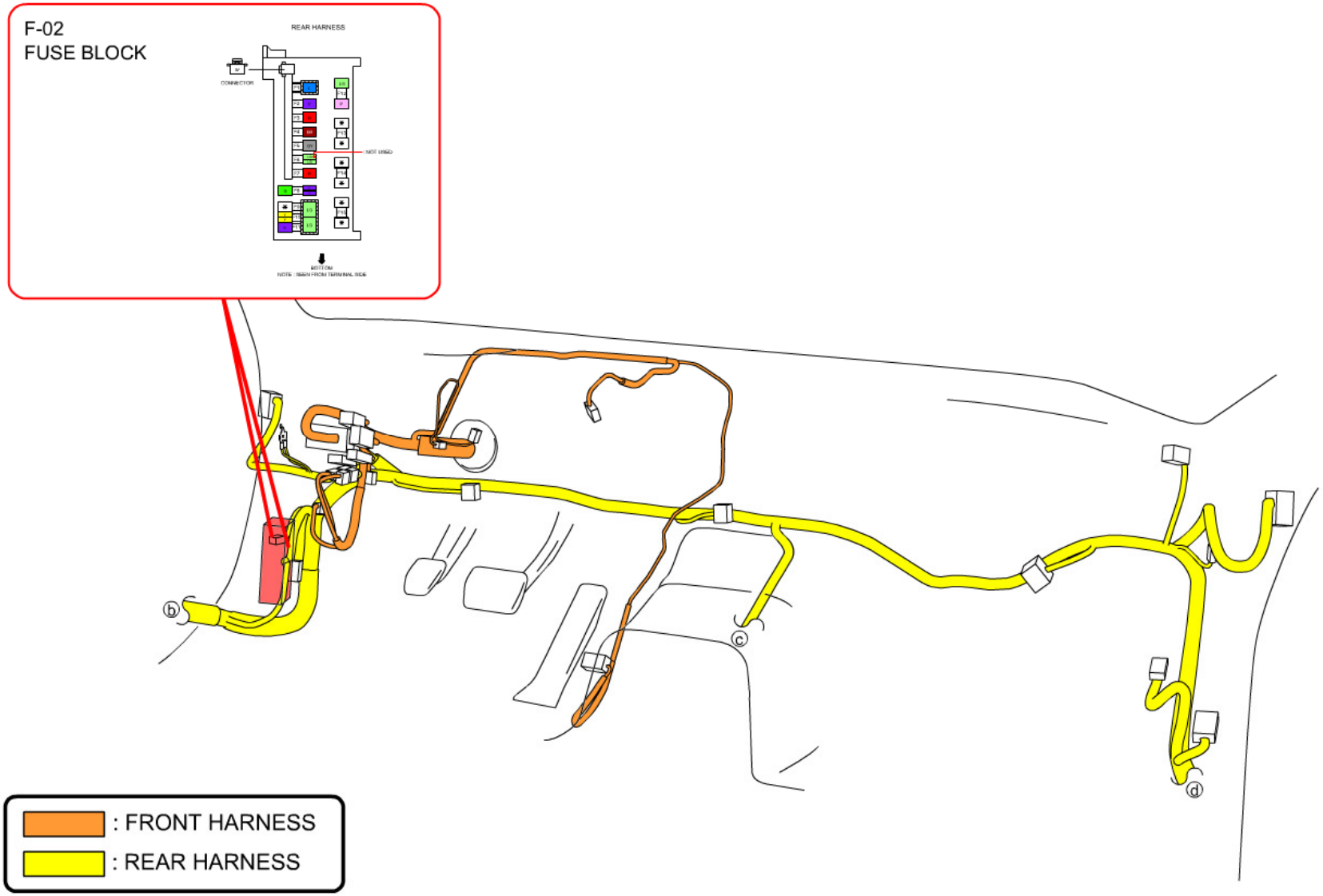

DATA LINK CONNECTOR

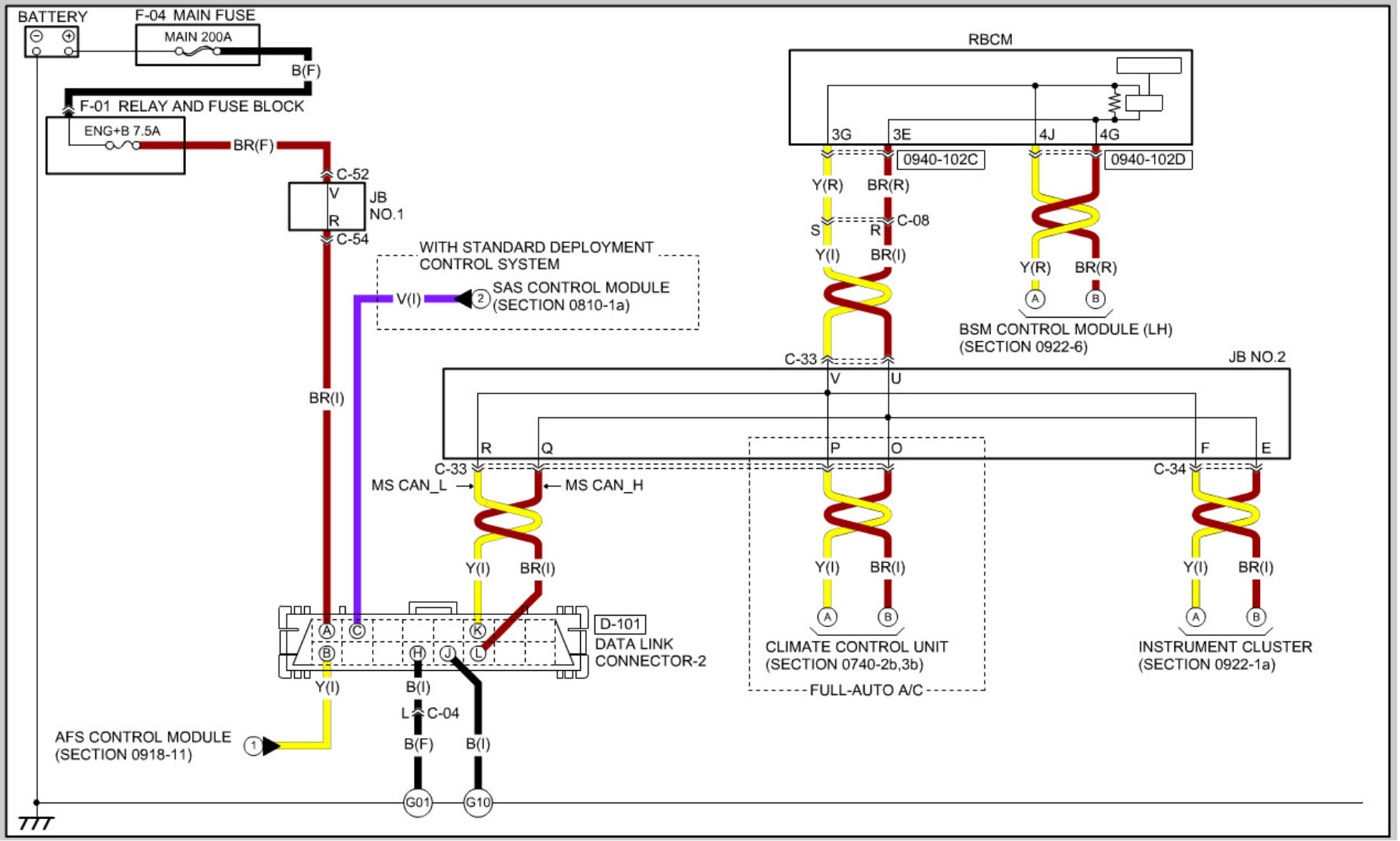

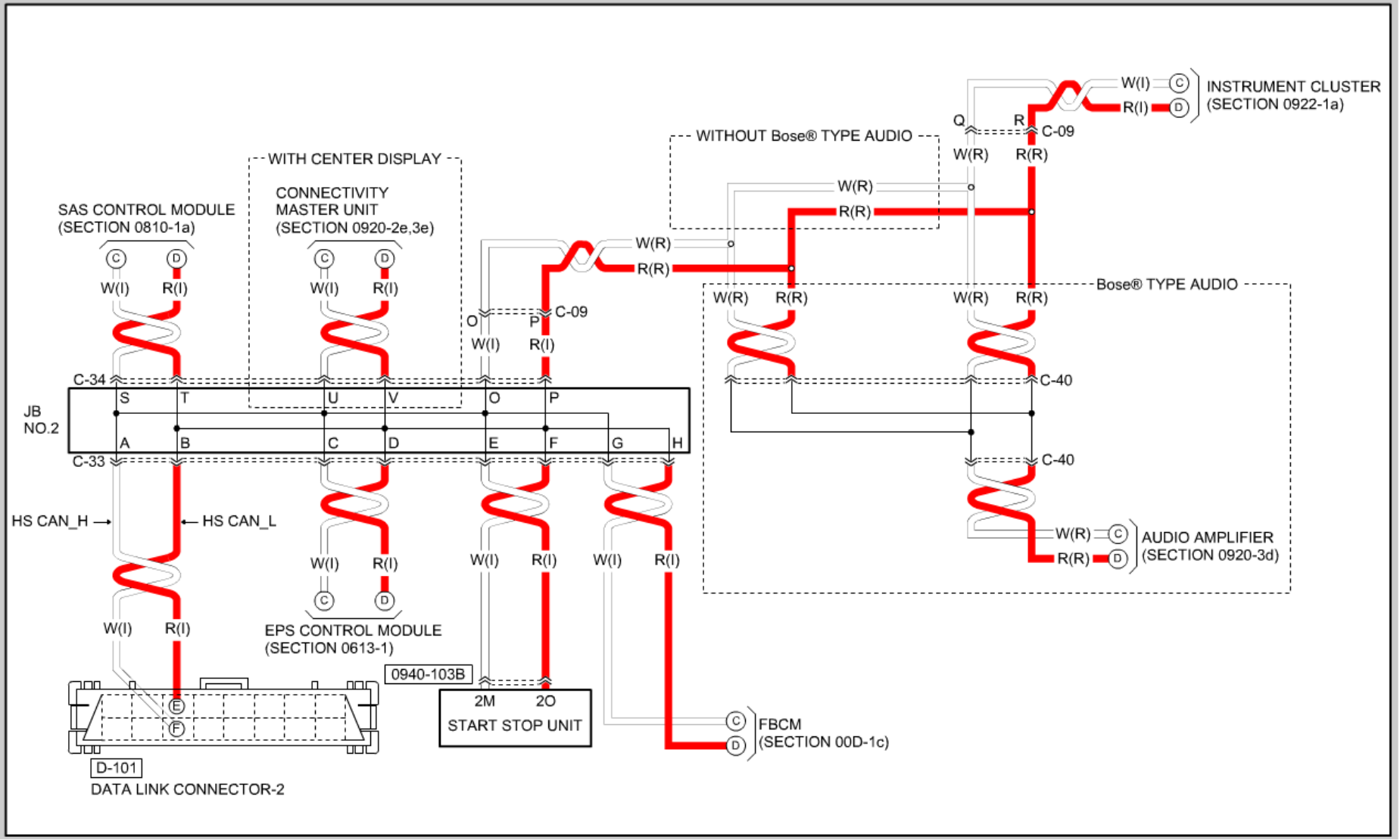
SAS CONTROL MODULE
(SECTION 0810-1a)
C
D
W(I)
R(I)
WITH CENTER DISPLAY
CONNECTIVITY
MASTER UNIT
(SECTION 0920-2e,3e)
C
D
W(I)
R(I)
W(R)
R(R)
O
P
C-09
W(I)
R(I)
WITHOUT Bose® TYPE AUDIO
W(R)
R(R)
Q
R
C-09
W(R)
R(R)
W(I)
R(I)
INSTRUMENT CLUSTER
(SECTION 0922-1a)
Bose® TYPE AUDIO
W(R)
R(R)
W(R)
R(R)
C-34
JB
NO.2
S
T
U
V
O
P
A
B
C
D
E
F
G
H
C-33
C-40
C-40
HS CAN_H
HS CAN_L
W(I)
R(I)
W(I)
R(I)
W(I)
R(I)
W(I)
R(I)
W(R)
R(R)
AUDIO AMPLIFIER
(SECTION 0920-3d)
W(I)
R(I)
EPS CONTROL MODULE
(SECTION 0613-1)
0940-103B
2M
2O
START STOP UNIT
FBCM
(SECTION 00D-1c)
E
F
D-101
DATA LINK CONNECTOR-2

@3 : WITHOUT SMART CITY BRAKE SUPPORT / WITHOUT HIGH BEAM CONTROL (HBC) SYSTEM

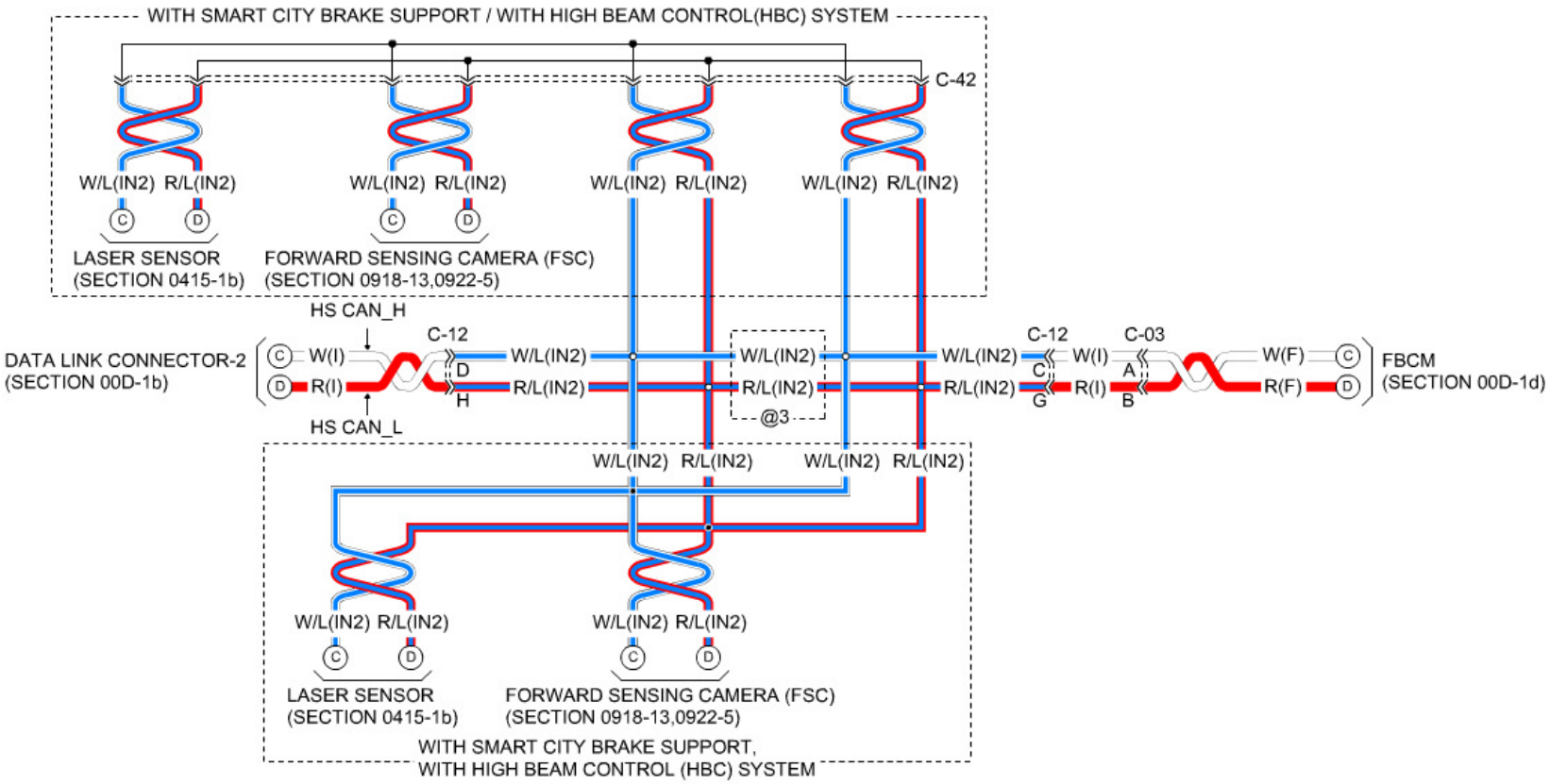

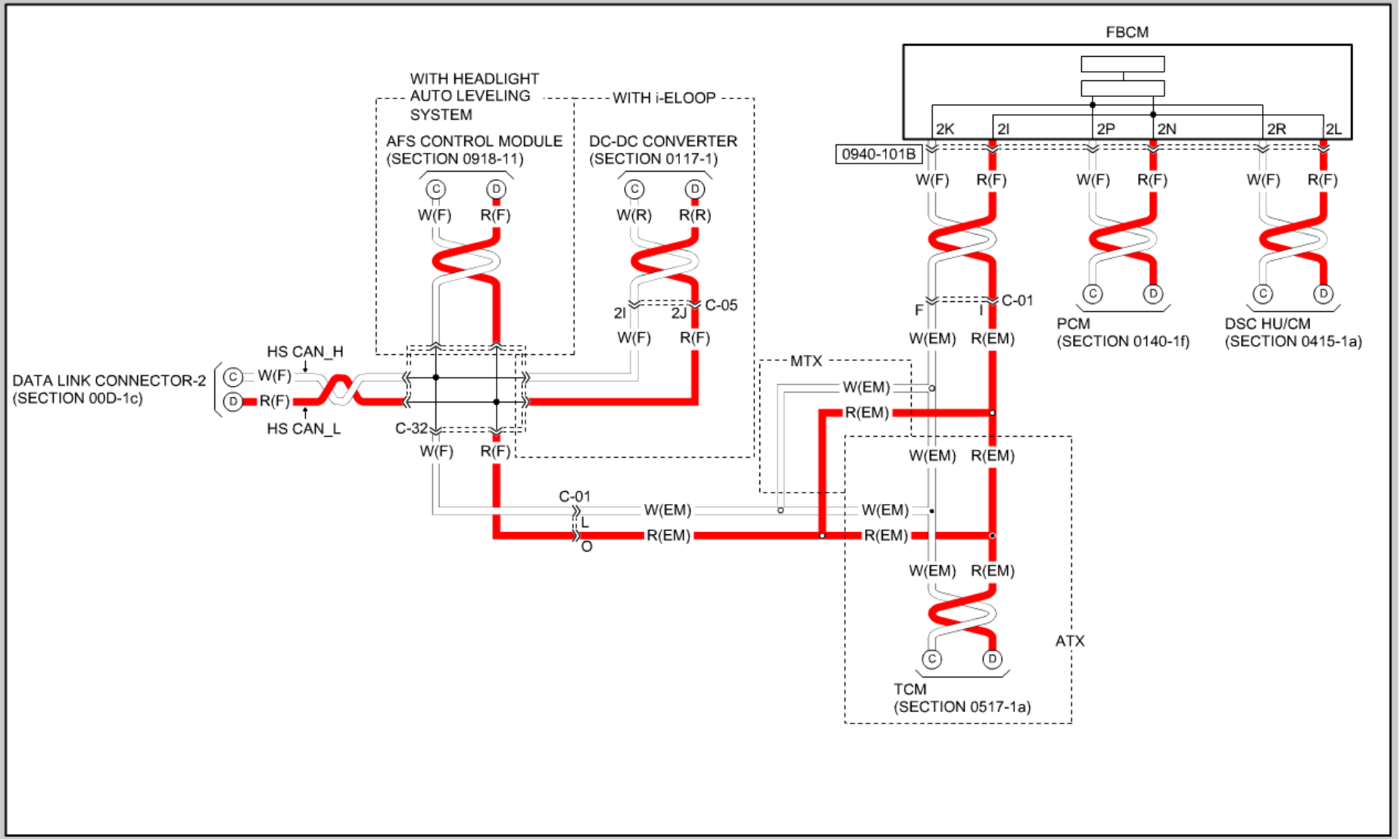
FBCM
2K
2I
2P
2N
2R
2L
0940-101B
W(F)
R(F)
WITH HEADLIGHT AUTO LEVELING SYSTEM
WITH i-ELOOP
AFS CONTROL MODULE (SECTION 0918-11)
DC-DC CONVERTER (SECTION 0117-1)
W(R)
R(R)
2I
2J
C-05
F
I
C-01
W(EM)
R(EM)
PCM (SECTION 0140-1f)
DSC HU/CM (SECTION 0415-1a)
HS CAN_H
HS CAN_L
DATA LINK CONNECTOR-2 (SECTION 00D-1c)
C-32
MTX
L
O
ATX
TCM (SECTION 0517-1a)

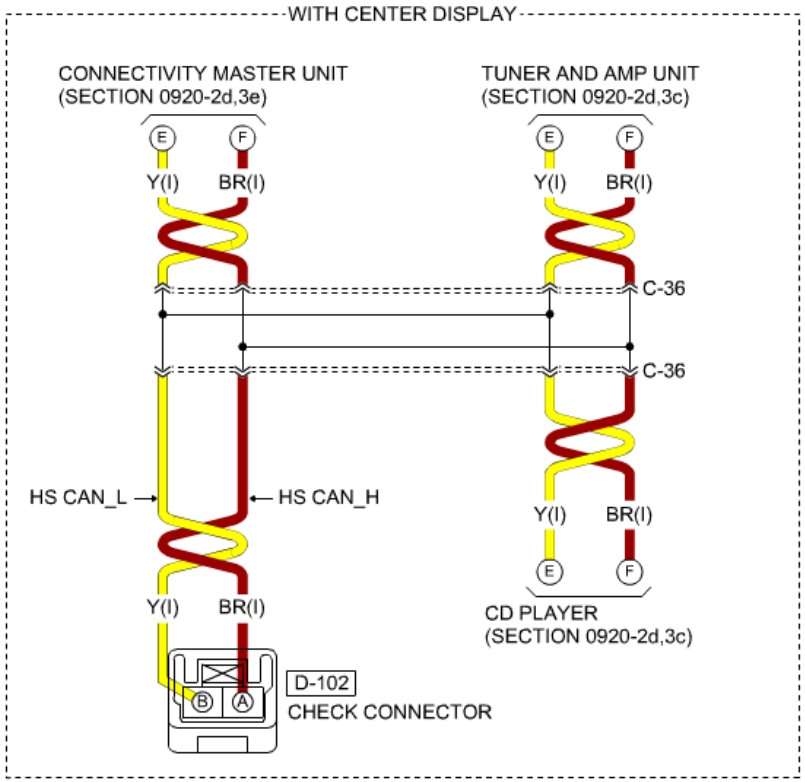
WITH CENTER DISPLAY
CONNECTIVITY MASTER UNIT
(SECTION 0920-2d,3e)
TUNER AND AMP UNIT
(SECTION 0920-2d,3c)
E
F
Y(I)
BR(I)
C-36
HS CAN_L
HS CAN_H
CD PLAYER
(SECTION 0920-2d,3c)
D-102
B
A
CHECK CONNECTOR

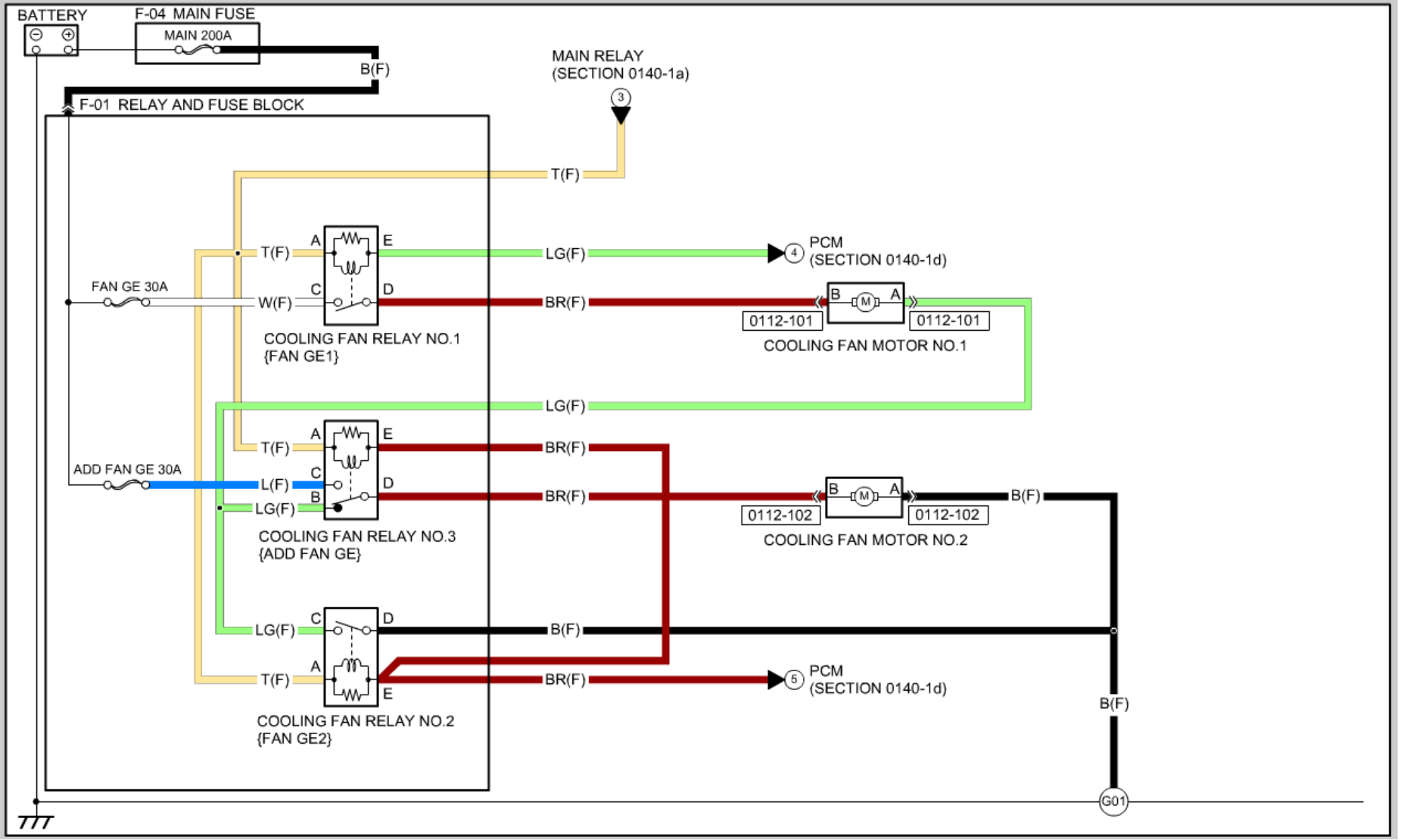
BATTERY
F-04 MAIN FUSE
MAIN 200A
B(F)
F-01 RELAY AND FUSE BLOCK
MAIN RELAY
(SECTION 0140-1a)
3
T(F)
A
E
T(F)
LG(F)
4
PCM
(SECTION 0140-1d)
FAN GE 30A
C
D
W(F)
BR(F)
B
M
A
0112-101
0112-101
COOLING FAN RELAY NO.1
{FAN GE1}
COOLING FAN MOTOR NO.1
LG(F)
A
E
T(F)
BR(F)
ADD FAN GE 30A
C
L(F)
D
BR(F)
B
LG(F)
B
M
A
B(F)
0112-102
0112-102
COOLING FAN RELAY NO.3
{ADD FAN GE}
COOLING FAN MOTOR NO.2
C
D
LG(F)
B(F)
A
T(F)
BR(F)
5
PCM
(SECTION 0140-1d)
E
B(F)
COOLING FAN RELAY NO.2
{FAN GE2}
G01

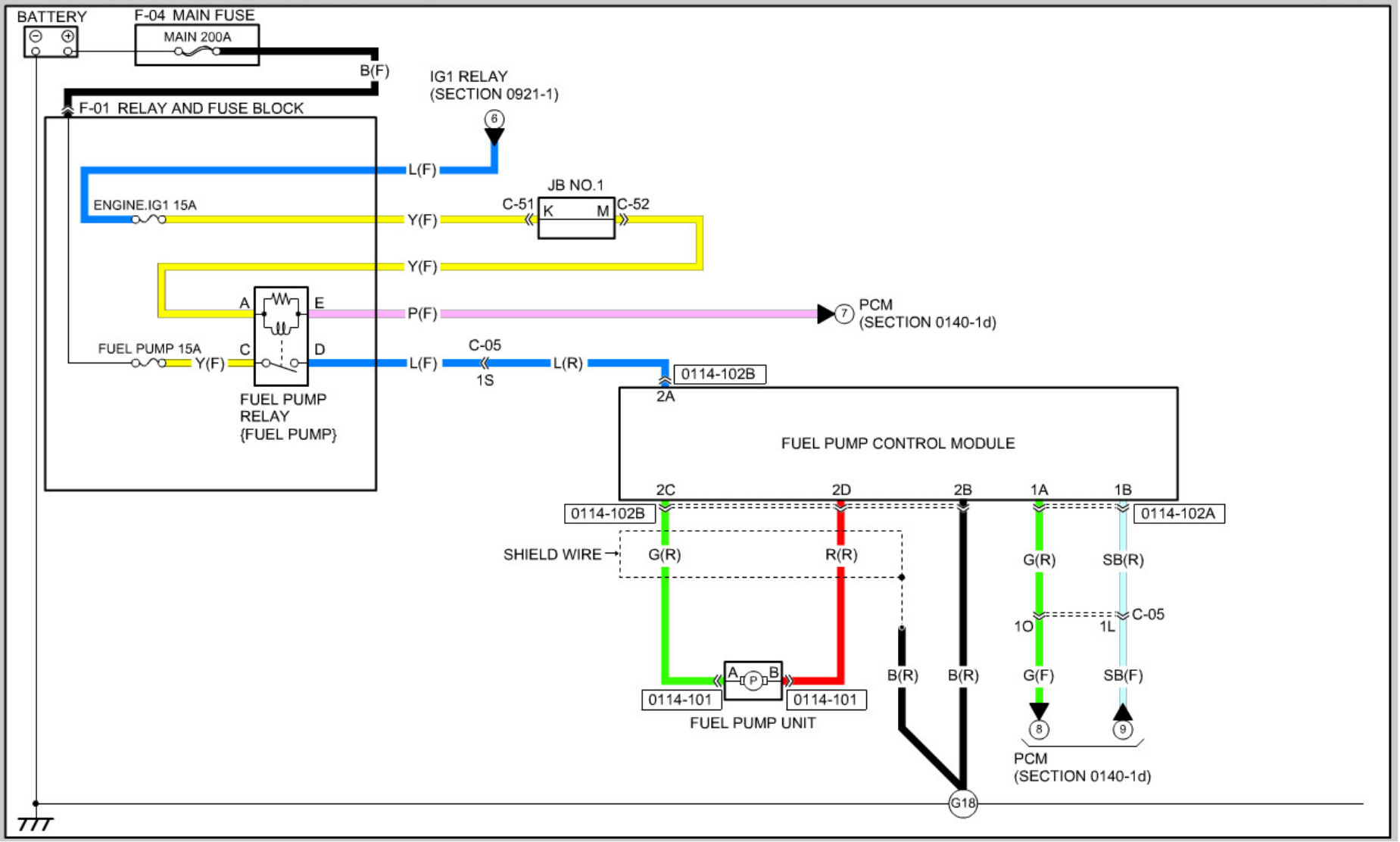
BATTERY
F-04 MAIN FUSE
MAIN 200A
B(F)
IG1 RELAY
(SECTION 0921-1)
6
F-01 RELAY AND FUSE BLOCK
L(F)
JB NO.1
ENGINE.IG1 15A
C-51
K
M
C-52
Y(F)
Y(F)
A
E
P(F)
7
PCM
(SECTION 0140-1d)
FUEL PUMP 15A
C
D
Y(F)
L(F)
C-05
1S
L(R)
0114-102B
2A
FUEL PUMP
RELAY
{FUEL PUMP}
FUEL PUMP CONTROL MODULE
2C
2D
2B
1A
1B
0114-102B
0114-102A
SHIELD WIRE
G(R)
R(R)
G(R)
SB(R)
1O
1L
C-05
A
P
B
B(R)
B(R)
G(F)
SB(F)
0114-101
0114-101
FUEL PUMP UNIT
8
9
PCM
(SECTION 0140-1d)
G18

CHARGING SYSTEM (SKYACTIV-G 2.0, 2.5 / WITH i-ELOOP)

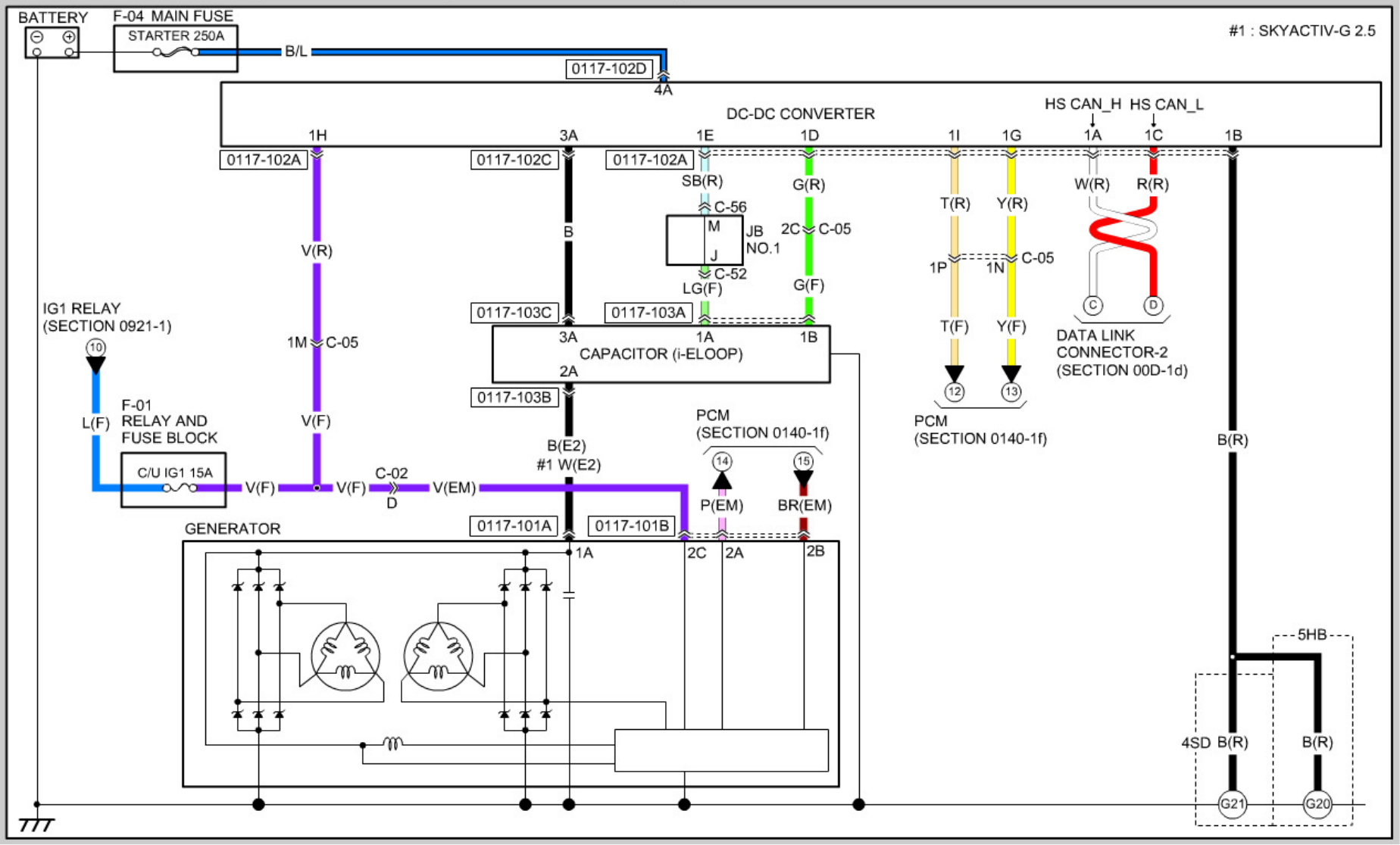

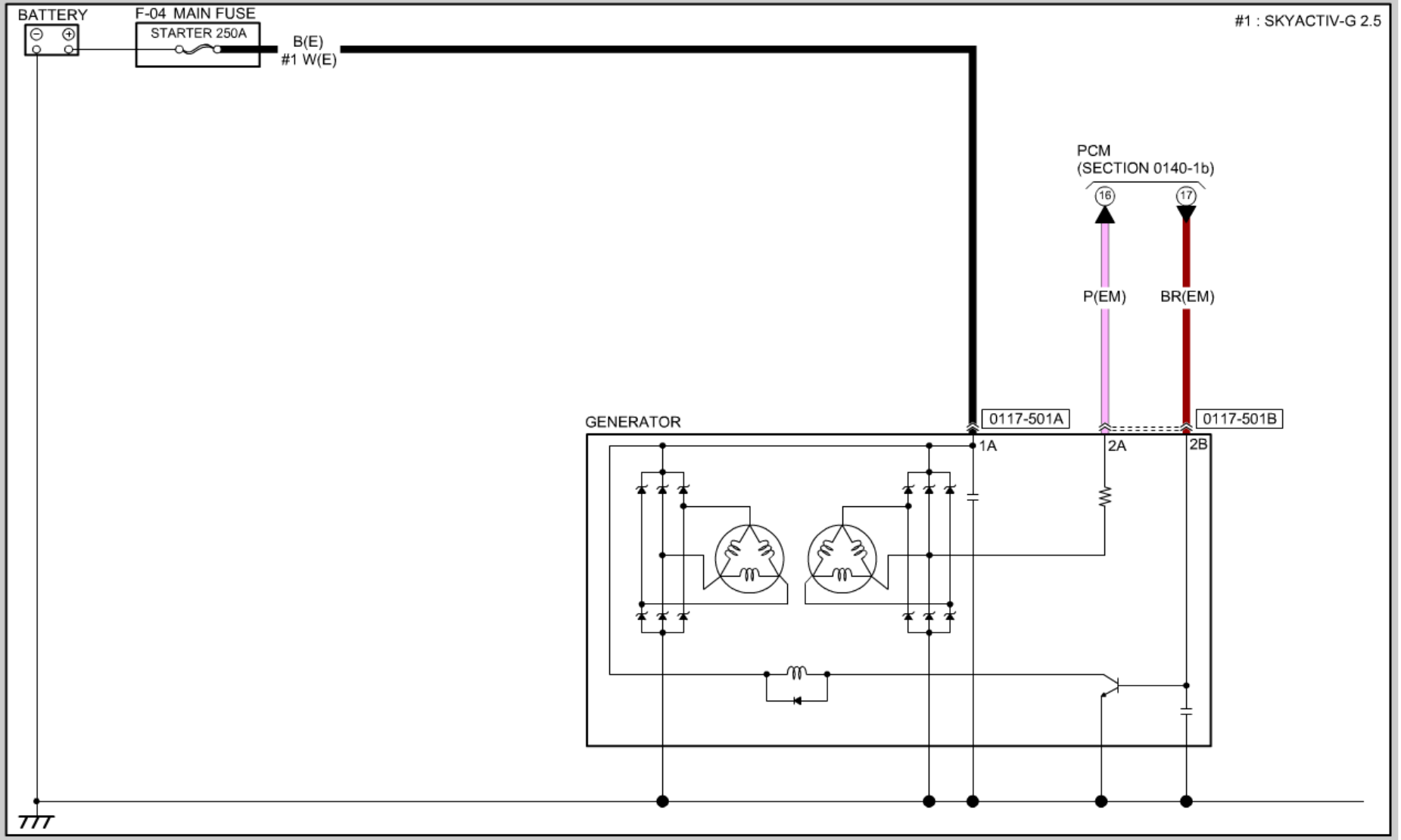
BATTERY
F-04 MAIN FUSE
STARTER 250A
B(E)
#1 W(E)
#1 : SKYACTIV-G 2.5
PCM
(SECTION 0140-1b)
16
17
P(EM)
BR(EM)
GENERATOR
0117-501A
0117-501B
1A
2A
2B

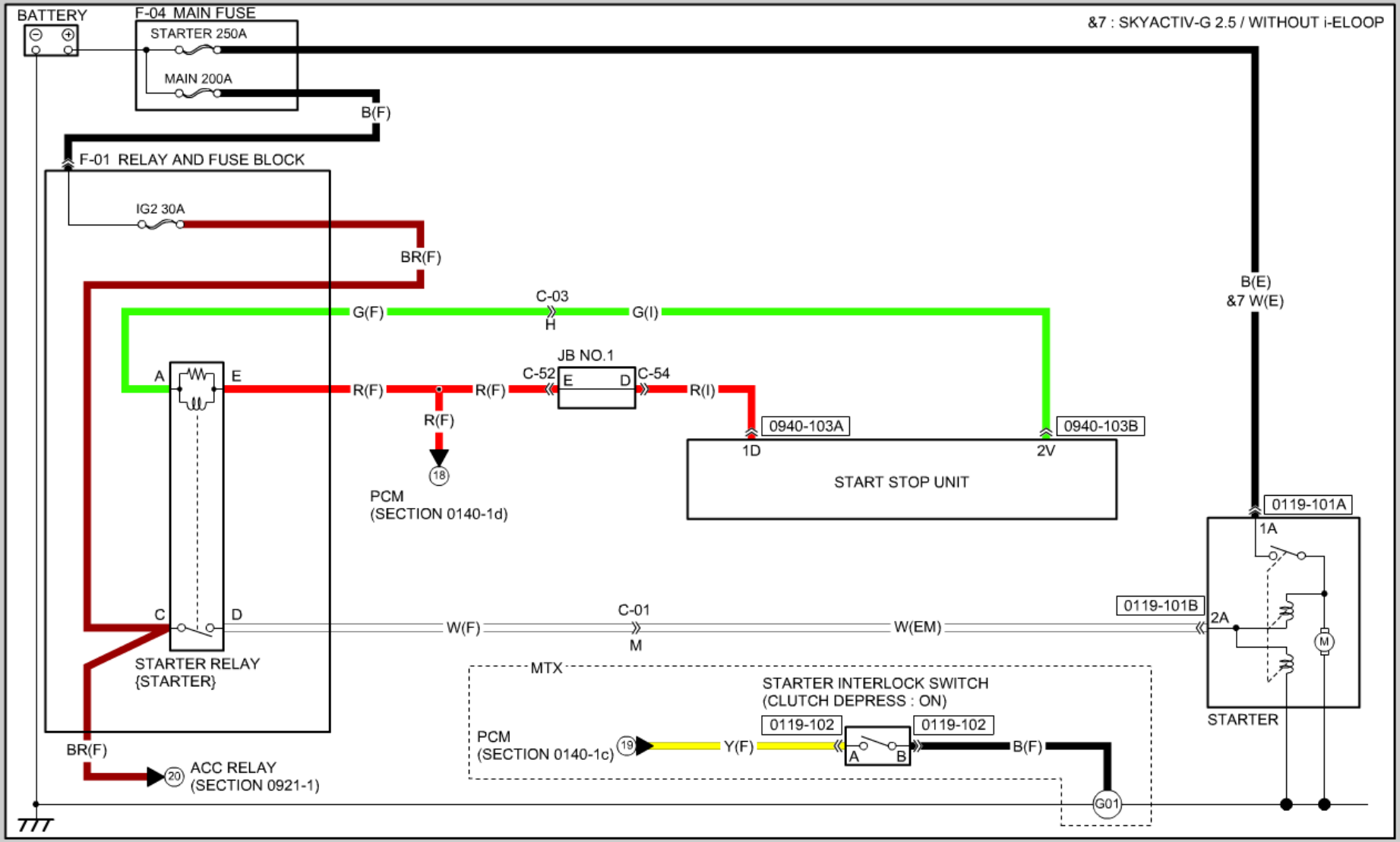
BATTERY
F-04 MAIN FUSE
STARTER 250A
MAIN 200A
B(F)
&7 : SKYACTIV-G 2.5 / WITHOUT i-ELOOP
F-01 RELAY AND FUSE BLOCK
IG2 30A
BR(F)
B(E)
&7 W(E)
C-03
G(F)
G(I)
H
JB NO.1
A
E
R(F)
R(F)
C-52
E
D
C-54
R(I)
R(F)
18
PCM
(SECTION 0140-1d)
0940-103A
0940-103B
1D
2V
START STOP UNIT
0119-101A
1A
C
D
W(F)
C-01
M
W(EM)
0119-101B
2A
M
STARTER RELAY
{STARTER}
MTX
STARTER INTERLOCK SWITCH
(CLUTCH DEPRESS : ON)
0119-102
0119-102
PCM
(SECTION 0140-1c)
19
Y(F)
A
B
B(F)
STARTER
BR(F)
20
ACC RELAY
(SECTION 0921-1)
G01

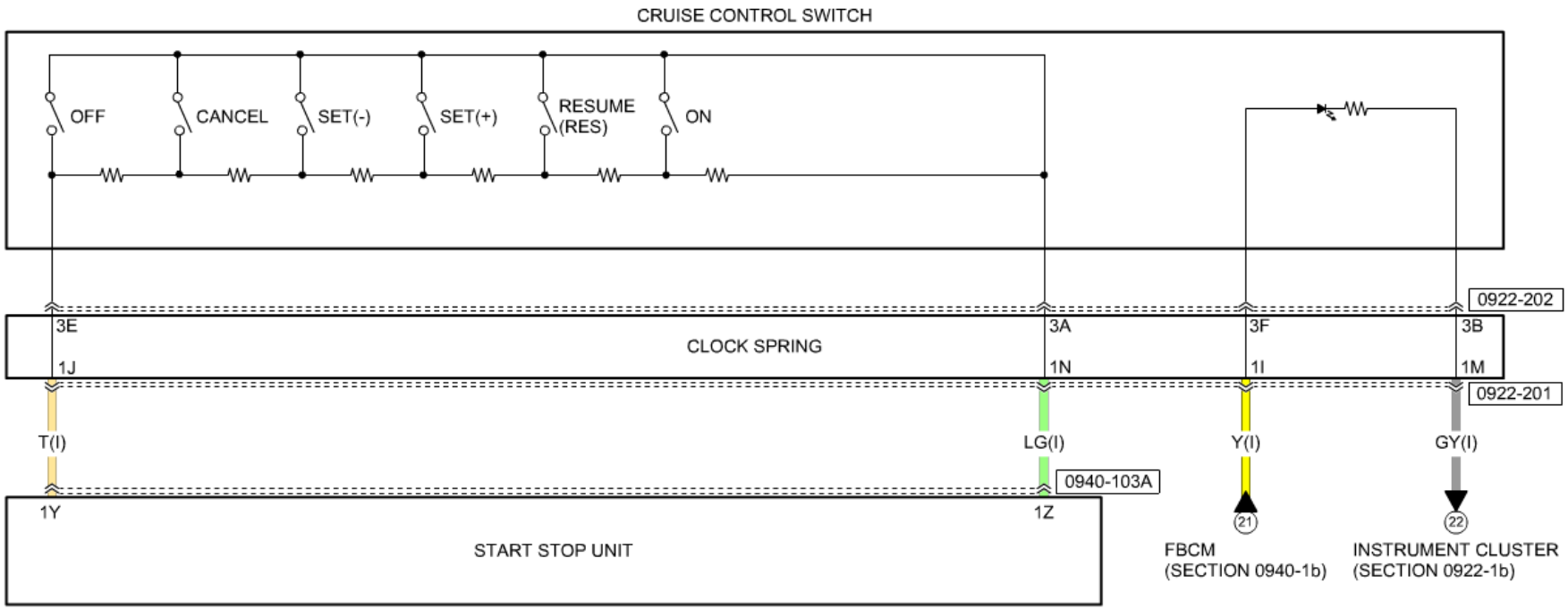
CRUISE CONTROL SWITCH
OFF
CANCEL
SET(-)
SET(+)
RESUME
(RES)
ON
0922-202
3E
3A
3F
3B
CLOCK SPRING
1J
1N
1I
1M
0922-201
T(I)
LG(I)
Y(I)
GY(I)
0940-103A
1Y
1Z
START STOP UNIT
21
22
FBCM
(SECTION 0940-1b)
INSTRUMENT CLUSTER
(SECTION 0922-1b)

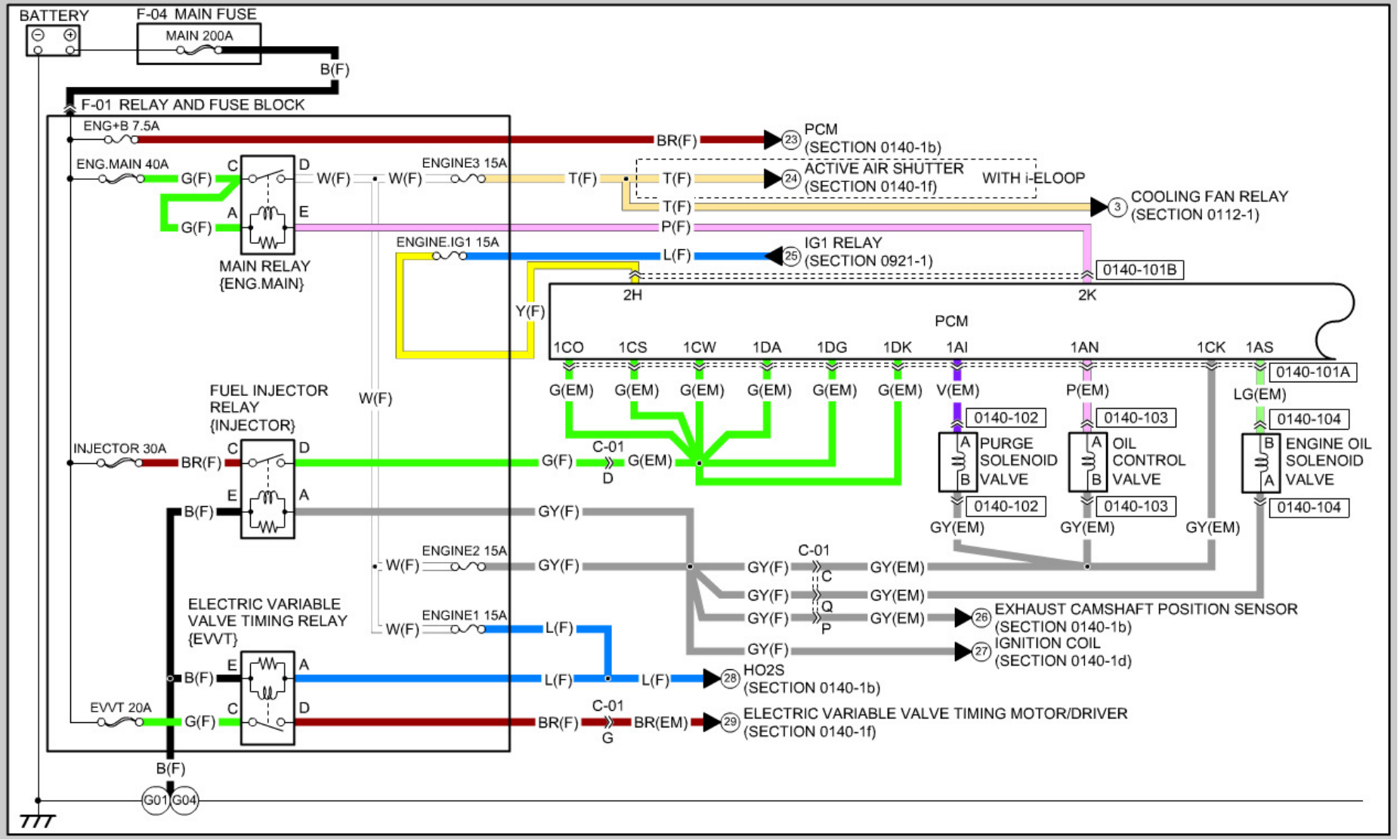
BATTERY
F-04 MAIN FUSE
MAIN 200A
B(F)
F-01 RELAY AND FUSE BLOCK
ENG+B 7.5A
BR(F)
23 PCM (SECTION 0140-1b)
ENG.MAIN 40A
G(F)
C
D
W(F)
ENGINE3 15A
T(F)
24 ACTIVE AIR SHUTTER (SECTION 0140-1f)
WITH i-ELOOP
3 COOLING FAN RELAY (SECTION 0112-1)
A
E
P(F)
MAIN RELAY {ENG.MAIN}
ENGINE.IG1 15A
L(F)
25 IG1 RELAY (SECTION 0921-1)
0140-101B
2H
2K
Y(F)
PCM
1CO 1CS 1CW 1DA 1DG 1DK 1AI 1AN 1CK 1AS
0140-101A
G(EM)
V(EM)
P(EM)
LG(EM)
0140-102
0140-103
0140-104
FUEL INJECTOR RELAY {INJECTOR}
INJECTOR 30A
BR(F)
C-01
D
PURGE SOLENOID VALVE
OIL CONTROL VALVE
ENGINE OIL SOLENOID VALVE
GY(F)
GY(EM)
ENGINE2 15A
ELECTRIC VARIABLE VALVE TIMING RELAY {EVVT}
ENGINE1 15A
C
Q
P
26 EXHAUST CAMSHAFT POSITION SENSOR (SECTION 0140-1b)
27 IGNITION COIL (SECTION 0140-1d)
28 HO2S (SECTION 0140-1b)
EVVT 20A
G
BR(EM)
29 ELECTRIC VARIABLE VALVE TIMING MOTOR/DRIVER (SECTION 0140-1f)
G01
G04

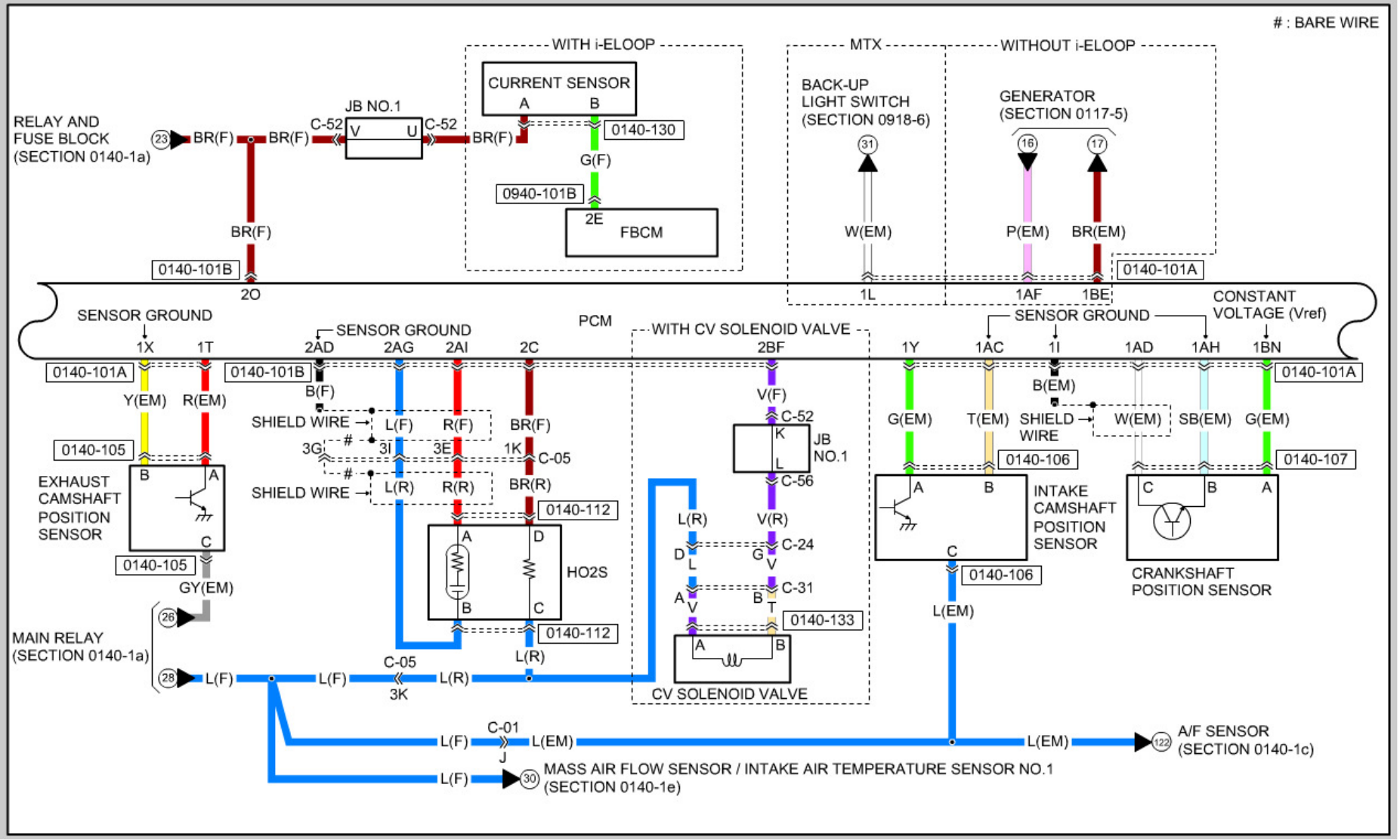
: BARE WIRE
WITH i-ELOOP
MTX
WITHOUT i-ELOOP
CURRENT SENSOR
A
B
0140-130
G(F)
0940-101B
2E
FBCM
JB NO.1
C-52
V
U
C-52
BR(F)
BR(F)
BR(F)
RELAY AND FUSE BLOCK (SECTION 0140-1a)
23
BR(F)
0140-101B
2O
BACK-UP LIGHT SWITCH (SECTION 0918-6)
31
W(EM)
1L
GENERATOR (SECTION 0117-5)
16
17
P(EM)
BR(EM)
1AF
1BE
0140-101A
SENSOR GROUND
1X
1T
SENSOR GROUND
2AD
2AG
2AI
2C
PCM
WITH CV SOLENOID VALVE
2BF
SENSOR GROUND
1Y
1AC
1I
1AD
1AH
1BN
CONSTANT VOLTAGE (Vref)
0140-101A
0140-101B
B(F)
Y(EM)
R(EM)
SHIELD WIRE
L(F)
R(F)
BR(F)
3G
#
3I
3E
1K
C-05
0140-105
EXHAUST CAMSHAFT POSITION SENSOR
B
A
C
SHIELD WIRE
L(R)
R(R)
BR(R)
0140-112
A
D
HO2S
B
C
0140-105
GY(EM)
26
MAIN RELAY (SECTION 0140-1a)
28
L(F)
L(F)
C-05
3K
L(R)
L(R)
0140-112
V(F)
C-52
K
JB NO.1
L
C-56
L(R)
V(R)
D
L
G
V
C-24
A
V
B
T
C-31
0140-133
A
B
CV SOLENOID VALVE
B(EM)
G(EM)
T(EM)
SHIELD WIRE
W(EM)
SB(EM)
G(EM)
0140-106
0140-107
A
B
C
INTAKE CAMSHAFT POSITION SENSOR
0140-106
L(EM)
C
B
A
CRANKSHAFT POSITION SENSOR
L(F)
C-01
J
L(EM)
L(EM)
122
A/F SENSOR (SECTION 0140-1c)
L(F)
30
MASS AIR FLOW SENSOR / INTAKE AIR TEMPERATURE SENSOR NO.1 (SECTION 0140-1e)

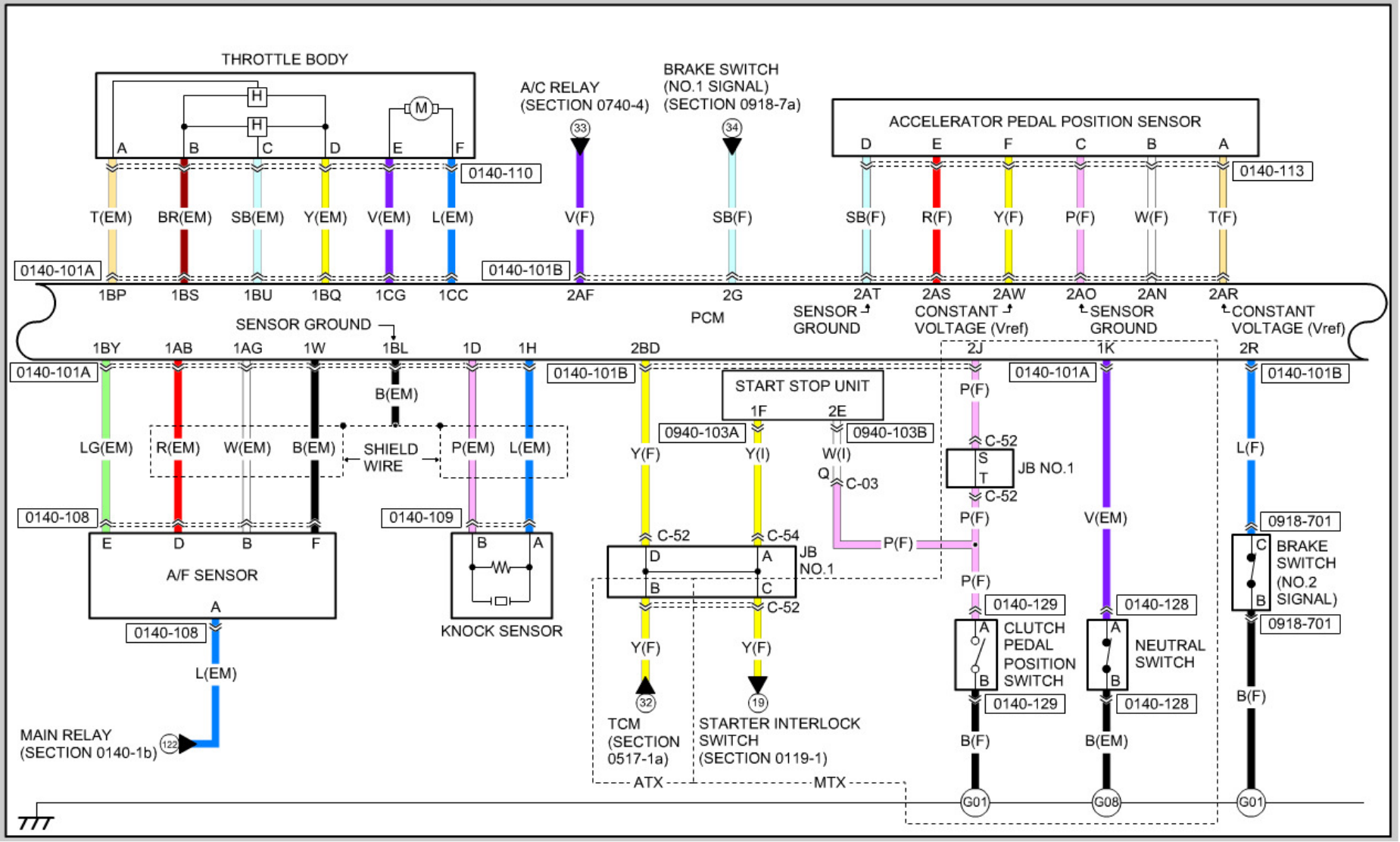
THROTTLE BODY
A/C RELAY (SECTION 0740-4)
BRAKE SWITCH (NO.1 SIGNAL) (SECTION 0918-7a)
ACCELERATOR PEDAL POSITION SENSOR
0140-110
0140-113
T(EM) BR(EM) SB(EM) Y(EM) V(EM) L(EM)
V(F) SB(F)
SB(F) R(F) Y(F) P(F) W(F) T(F)
0140-101A
0140-101B
1BP 1BS 1BU 1BQ 1CG 1CC
2AF 2G
PCM
2AT SENSOR GROUND
2AS CONSTANT VOLTAGE (Vref)
2AW
2AO SENSOR GROUND
2AN
2AR CONSTANT VOLTAGE (Vref)
SENSOR GROUND
1BY 1AB 1AG 1W 1BL 1D 1H
2BD
2J 1K 2R
B(EM)
LG(EM) R(EM) W(EM) B(EM) SHIELD WIRE P(EM) L(EM)
START STOP UNIT
1F 2E
0940-103A
0940-103B
Y(F) Y(I) W(I)
C-03
P(F)
C-52 JB NO.1
L(F)
V(EM)
0140-108
0140-109
A/F SENSOR
KNOCK SENSOR
C-52 C-54 JB NO.1
0918-701
BRAKE SWITCH (NO.2 SIGNAL)
0140-129
0140-128
CLUTCH PEDAL POSITION SWITCH
NEUTRAL SWITCH
L(EM)
MAIN RELAY (SECTION 0140-1b)
TCM (SECTION 0517-1a)
STARTER INTERLOCK SWITCH (SECTION 0119-1)
B(F)
B(EM)
ATX
MTX
G01
G08

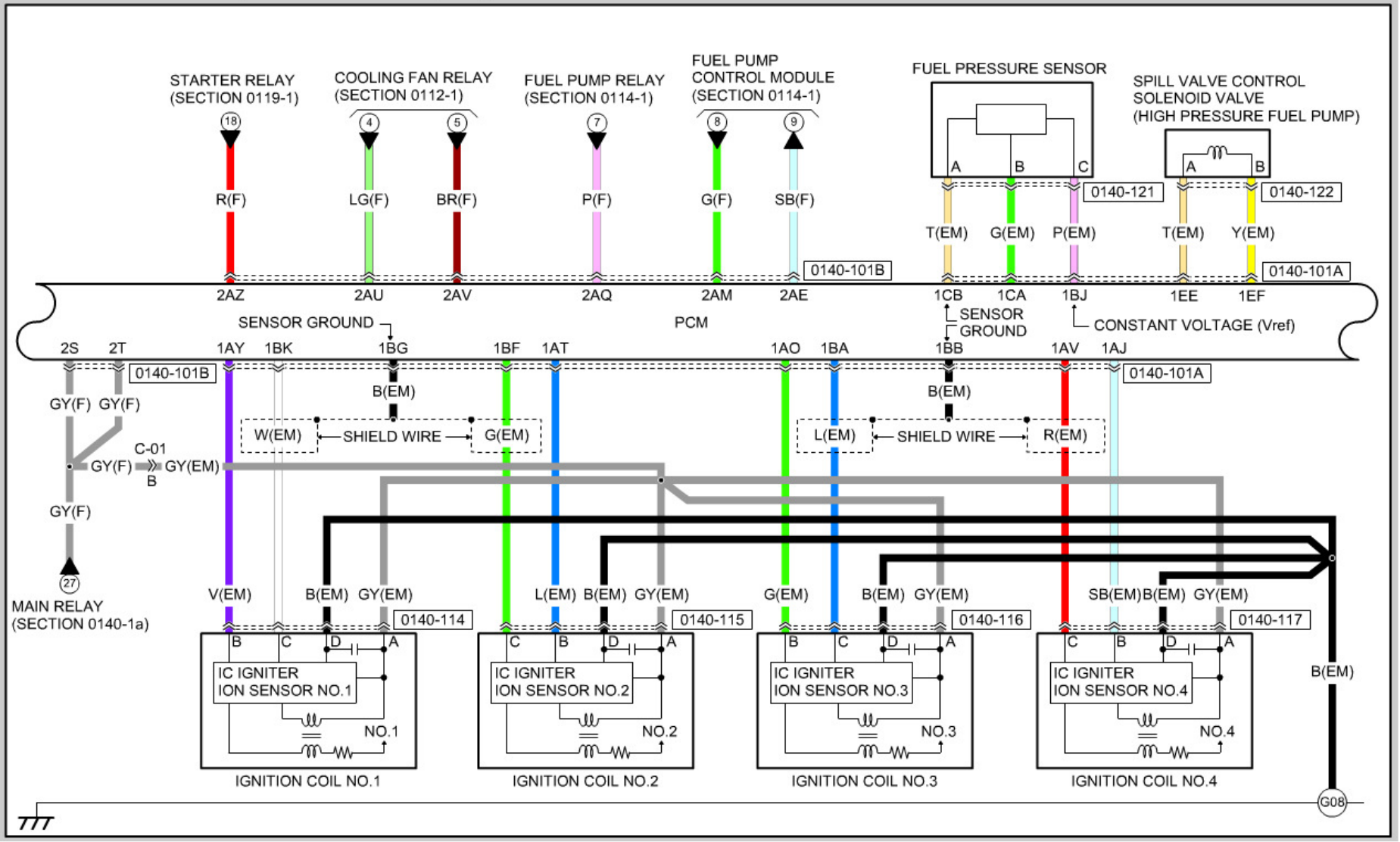
STARTER RELAY
(SECTION 0119-1)
COOLING FAN RELAY
(SECTION 0112-1)
FUEL PUMP RELAY
(SECTION 0114-1)
FUEL PUMP
CONTROL MODULE
(SECTION 0114-1)
FUEL PRESSURE SENSOR
SPILL VALVE CONTROL
SOLENOID VALVE
(HIGH PRESSURE FUEL PUMP)
18
4
5
7
8
9
R(F)
LG(F)
BR(F)
P(F)
G(F)
SB(F)
0140-121
0140-122
T(EM)
G(EM)
P(EM)
T(EM)
Y(EM)
0140-101B
0140-101A
2AZ
2AU
2AV
2AQ
2AM
2AE
1CB
1CA
1BJ
1EE
1EF
SENSOR GROUND
PCM
SENSOR
GROUND
CONSTANT VOLTAGE (Vref)
2S
2T
1AY
1BK
1BG
1BF
1AT
1AO
1BA
1BB
1AV
1AJ
0140-101B
0140-101A
B(EM)
B(EM)
GY(F)
GY(F)
W(EM)
SHIELD WIRE
G(EM)
L(EM)
SHIELD WIRE
R(EM)
C-01
GY(F)
GY(EM)
B
GY(F)
27
MAIN RELAY
(SECTION 0140-1a)
V(EM)
B(EM)
GY(EM)
L(EM)
B(EM)
GY(EM)
G(EM)
B(EM)
GY(EM)
SB(EM)
B(EM)
GY(EM)
0140-114
0140-115
0140-116
0140-117
IC IGNITER
ION SENSOR NO.1
IC IGNITER
ION SENSOR NO.2
IC IGNITER
ION SENSOR NO.3
IC IGNITER
ION SENSOR NO.4
NO.1
NO.2
NO.3
NO.4
B(EM)
IGNITION COIL NO.1
IGNITION COIL NO.2
IGNITION COIL NO.3
IGNITION COIL NO.4
G08

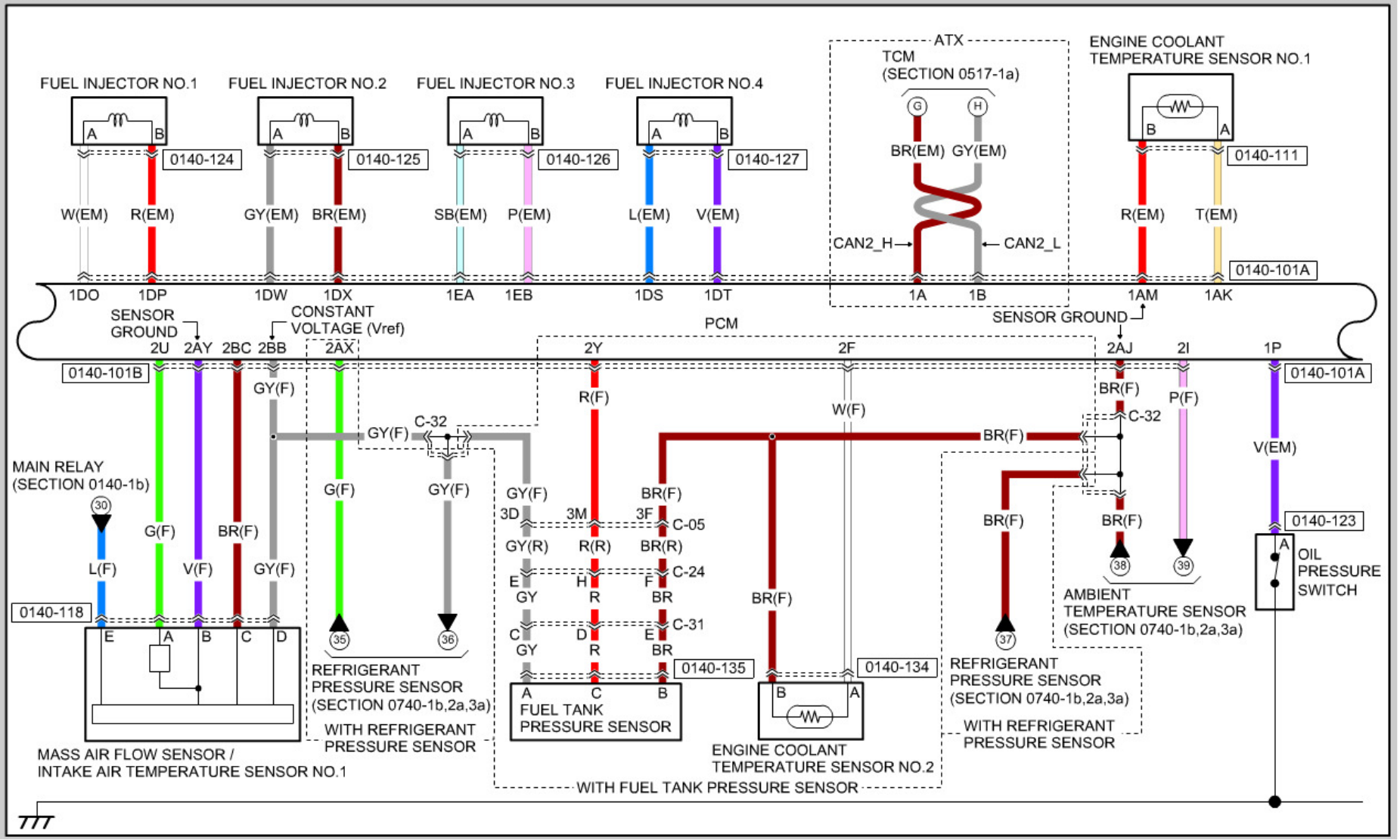
FUEL INJECTOR NO.1
FUEL INJECTOR NO.2
FUEL INJECTOR NO.3
FUEL INJECTOR NO.4
0140-124
0140-125
0140-126
0140-127
W(EM) R(EM)
GY(EM) BR(EM)
SB(EM) P(EM)
L(EM) V(EM)
ATX
TCM
(SECTION 0517-1a)
BR(EM) GY(EM)
CAN2_H
CAN2_L
ENGINE COOLANT
TEMPERATURE SENSOR NO.1
0140-111
R(EM) T(EM)
0140-101A
1DO 1DP 1DW 1DX 1EA 1EB 1DS 1DT 1A 1B 1AM 1AK
SENSOR GROUND
CONSTANT
VOLTAGE (Vref)
PCM
SENSOR GROUND
2U 2AY 2BC 2BB 2AX 2Y 2F 2AJ 2I 1P
0140-101B
0140-101A
GY(F)
C-32
R(F)
W(F)
BR(F)
P(F)
V(EM)
MAIN RELAY
(SECTION 0140-1b)
30
G(F)
BR(F)
L(F)
V(F)
GY(F)
3D 3M 3F
C-05
GY(R) R(R) BR(R)
E H F
C-24
GY R BR
C D E
C-31
GY R BR
0140-123
OIL
PRESSURE
SWITCH
38 39
AMBIENT
TEMPERATURE SENSOR
(SECTION 0740-1b,2a,3a)
0140-118
E A B C D
35 36
REFRIGERANT
PRESSURE SENSOR
(SECTION 0740-1b,2a,3a)
WITH REFRIGERANT
PRESSURE SENSOR
0140-135
A C B
FUEL TANK
PRESSURE SENSOR
0140-134
B A
ENGINE COOLANT
TEMPERATURE SENSOR NO.2
37
REFRIGERANT
PRESSURE SENSOR
(SECTION 0740-1b,2a,3a)
WITH REFRIGERANT
PRESSURE SENSOR
MASS AIR FLOW SENSOR /
INTAKE AIR TEMPERATURE SENSOR NO.1
WITH FUEL TANK PRESSURE SENSOR

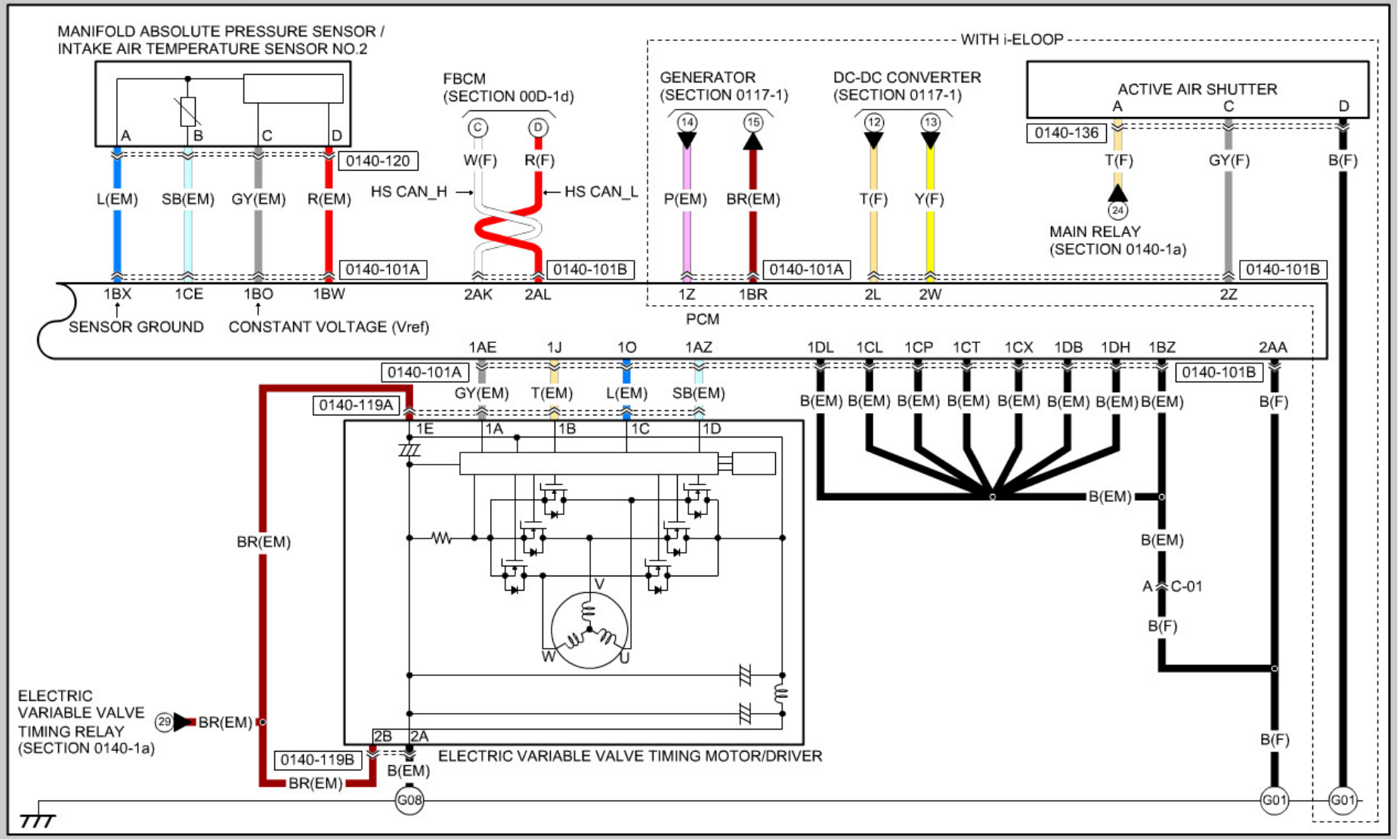
MANIFOLD ABSOLUTE PRESSURE SENSOR / INTAKE AIR TEMPERATURE SENSOR NO.2
A
B
C
D
0140-120
L(EM)
SB(EM)
GY(EM)
R(EM)
0140-101A
1BX
1CE
1BO
1BW
SENSOR GROUND
CONSTANT VOLTAGE (Vref)
FBCM (SECTION 00D-1d)
W(F)
R(F)
HS CAN_H
HS CAN_L
0140-101B
2AK
2AL
WITH i-ELOOP
GENERATOR (SECTION 0117-1)
P(EM)
BR(EM)
1Z
1BR
DC-DC CONVERTER (SECTION 0117-1)
T(F)
Y(F)
2L
2W
ACTIVE AIR SHUTTER
0140-136
T(F)
GY(F)
B(F)
MAIN RELAY (SECTION 0140-1a)
2Z
PCM
1AE
1J
1O
1AZ
1DL
1CL
1CP
1CT
1CX
1DB
1DH
1BZ
2AA
GY(EM)
T(EM)
L(EM)
SB(EM)
B(EM)
0140-119A
1E
1A
1B
1C
1D
V
W
U
BR(EM)
A
C-01
ELECTRIC VARIABLE VALVE TIMING RELAY (SECTION 0140-1a)
29
2B
2A
0140-119B
ELECTRIC VARIABLE VALVE TIMING MOTOR/DRIVER
G08
G01

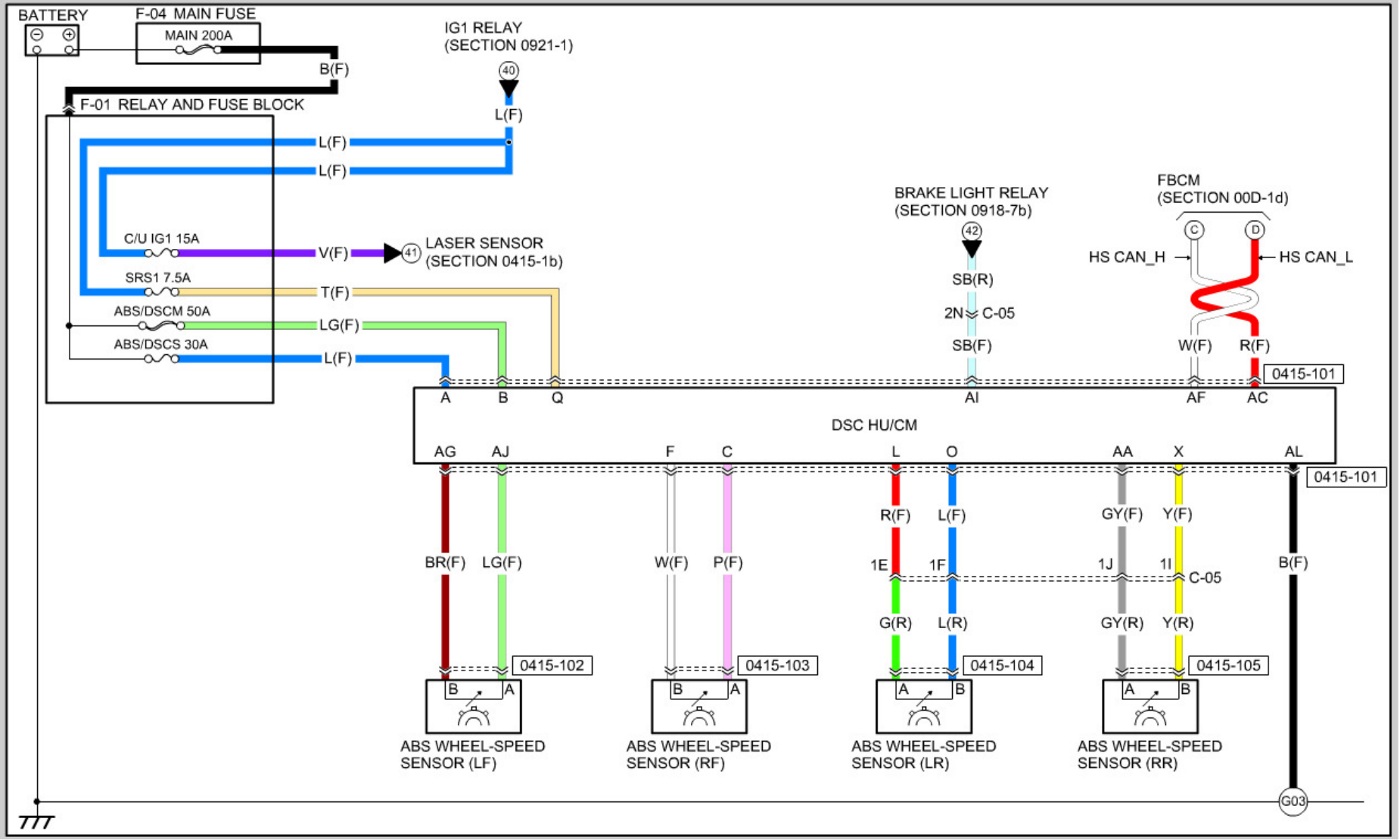
BATTERY
F-04 MAIN FUSE
MAIN 200A
B(F)
F-01 RELAY AND FUSE BLOCK
IG1 RELAY
(SECTION 0921-1)
40
L(F)
L(F)
L(F)
C/U IG1 15A
V(F)
41
LASER SENSOR
(SECTION 0415-1b)
SRS1 7.5A
T(F)
ABS/DSCM 50A
LG(F)
ABS/DSCS 30A
L(F)
BRAKE LIGHT RELAY
(SECTION 0918-7b)
42
SB(R)
2N
C-05
SB(F)
FBCM
(SECTION 00D-1d)
C
D
HS CAN_H
HS CAN_L
W(F)
R(F)
0415-101
A
B
Q
AI
AF
AC
DSC HU/CM
AG
AJ
F
C
L
O
AA
X
AL
0415-101
R(F)
L(F)
GY(F)
Y(F)
BR(F)
LG(F)
W(F)
P(F)
1E
1F
1J
1I
C-05
B(F)
G(R)
L(R)
GY(R)
Y(R)
0415-102
0415-103
0415-104
0415-105
B
A
ABS WHEEL-SPEED
SENSOR (LF)
ABS WHEEL-SPEED
SENSOR (RF)
ABS WHEEL-SPEED
SENSOR (LR)
ABS WHEEL-SPEED
SENSOR (RR)
G03

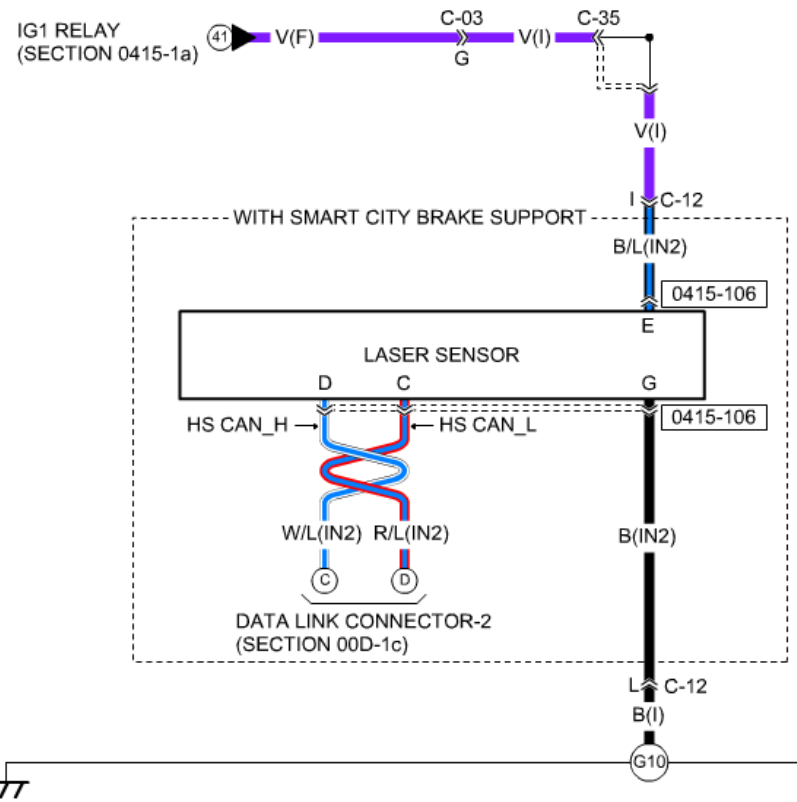
IG1 RELAY
(SECTION 0415-1a)
41
V(F)
C-03
G
V(I)
C-35
V(I)
I
C-12
WITH SMART CITY BRAKE SUPPORT
B/L(IN2)
0415-106
E
LASER SENSOR
D
C
G
0415-106
HS CAN_H
HS CAN_L
W/L(IN2)
R/L(IN2)
B(IN2)
C
D
DATA LINK CONNECTOR-2
(SECTION 00D-1c)
L
C-12
B(I)
G10

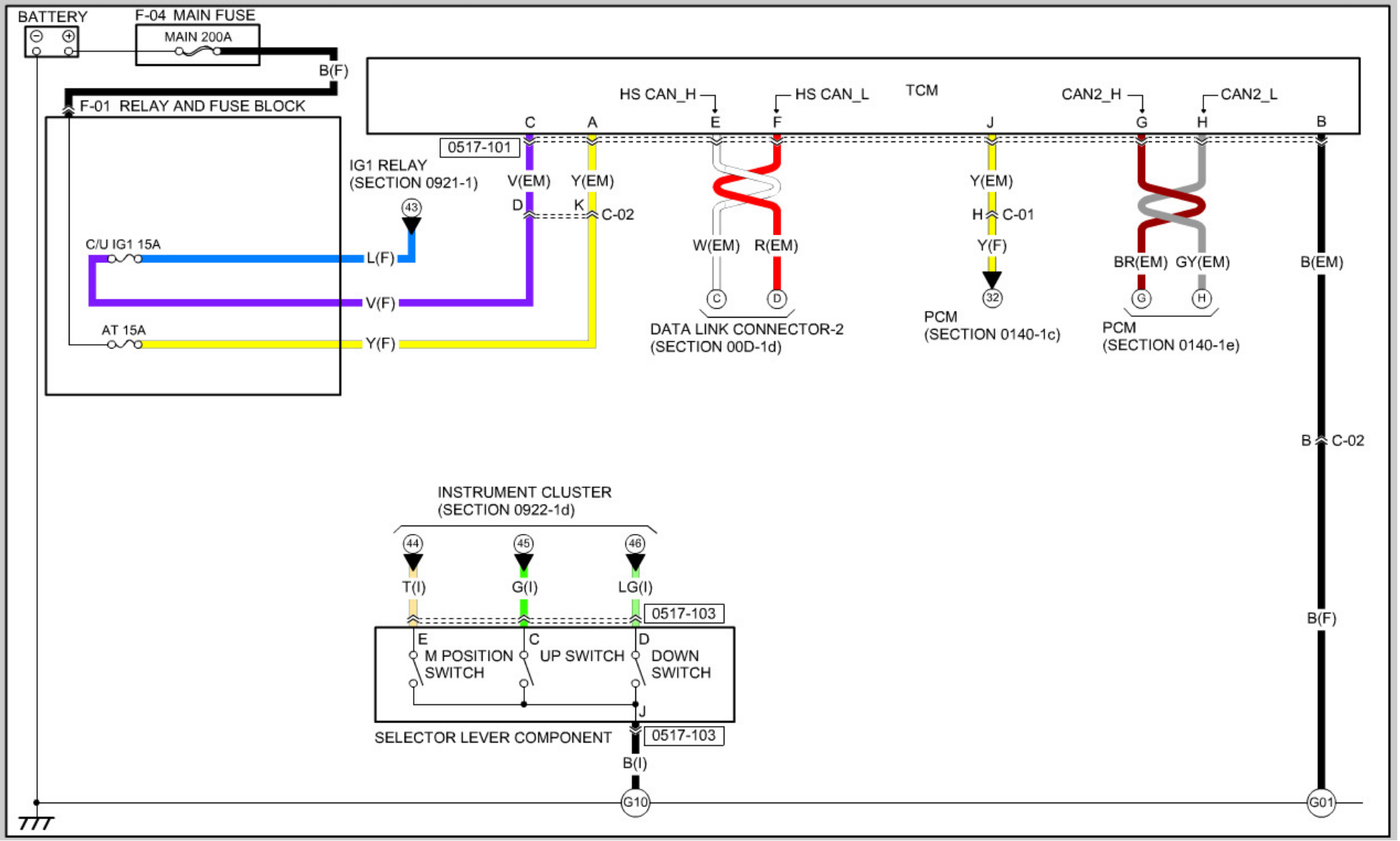
BATTERY
F-04 MAIN FUSE
MAIN 200A
B(F)
F-01 RELAY AND FUSE BLOCK
C/U IG1 15A
AT 15A
L(F)
V(F)
Y(F)
IG1 RELAY
(SECTION 0921-1)
43
0517-101
V(EM)
Y(EM)
D
K
C-02
TCM
HS CAN_H
HS CAN_L
CAN2_H
CAN2_L
C
A
E
F
J
G
H
B
W(EM)
R(EM)
DATA LINK CONNECTOR-2
(SECTION 00D-1d)
Y(EM)
H
C-01
Y(F)
32
PCM
(SECTION 0140-1c)
BR(EM)
GY(EM)
PCM
(SECTION 0140-1e)
B(EM)
B
C-02
INSTRUMENT CLUSTER
(SECTION 0922-1d)
44
45
46
T(I)
G(I)
LG(I)
0517-103
E
C
D
M POSITION SWITCH
UP SWITCH
DOWN SWITCH
J
SELECTOR LEVER COMPONENT
0517-103
B(I)
B(F)
G10
G01

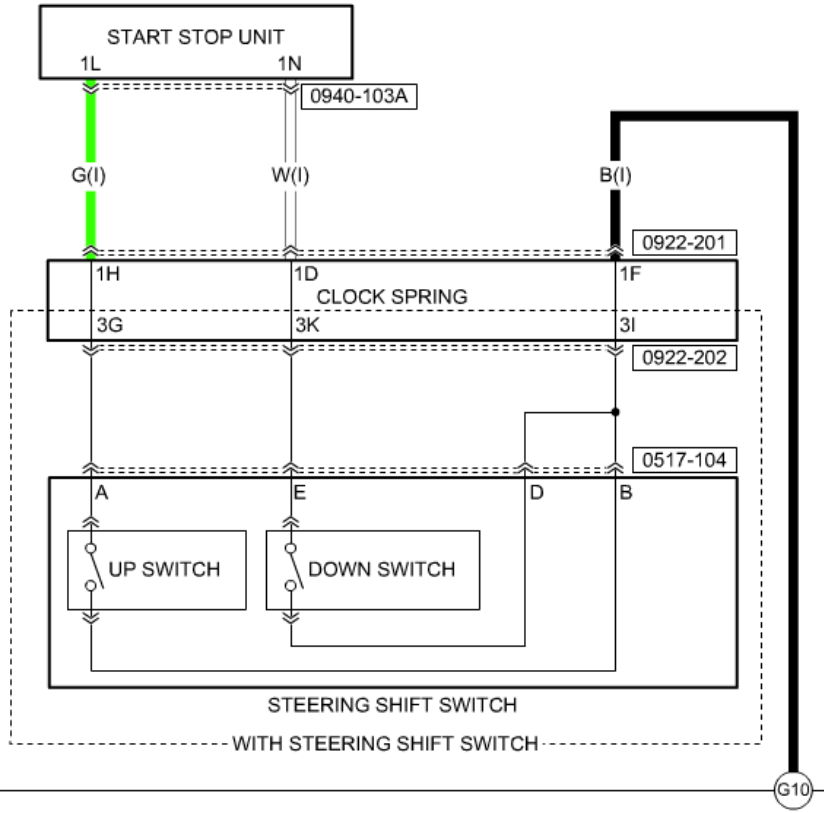
START STOP UNIT
1L
1N
0940-103A
G(I)
W(I)
B(I)
0922-201
1H
1D
1F
CLOCK SPRING
3G
3K
3I
0922-202
0517-104
A
E
D
B
UP SWITCH
DOWN SWITCH
STEERING SHIFT SWITCH
WITH STEERING SHIFT SWITCH
G10

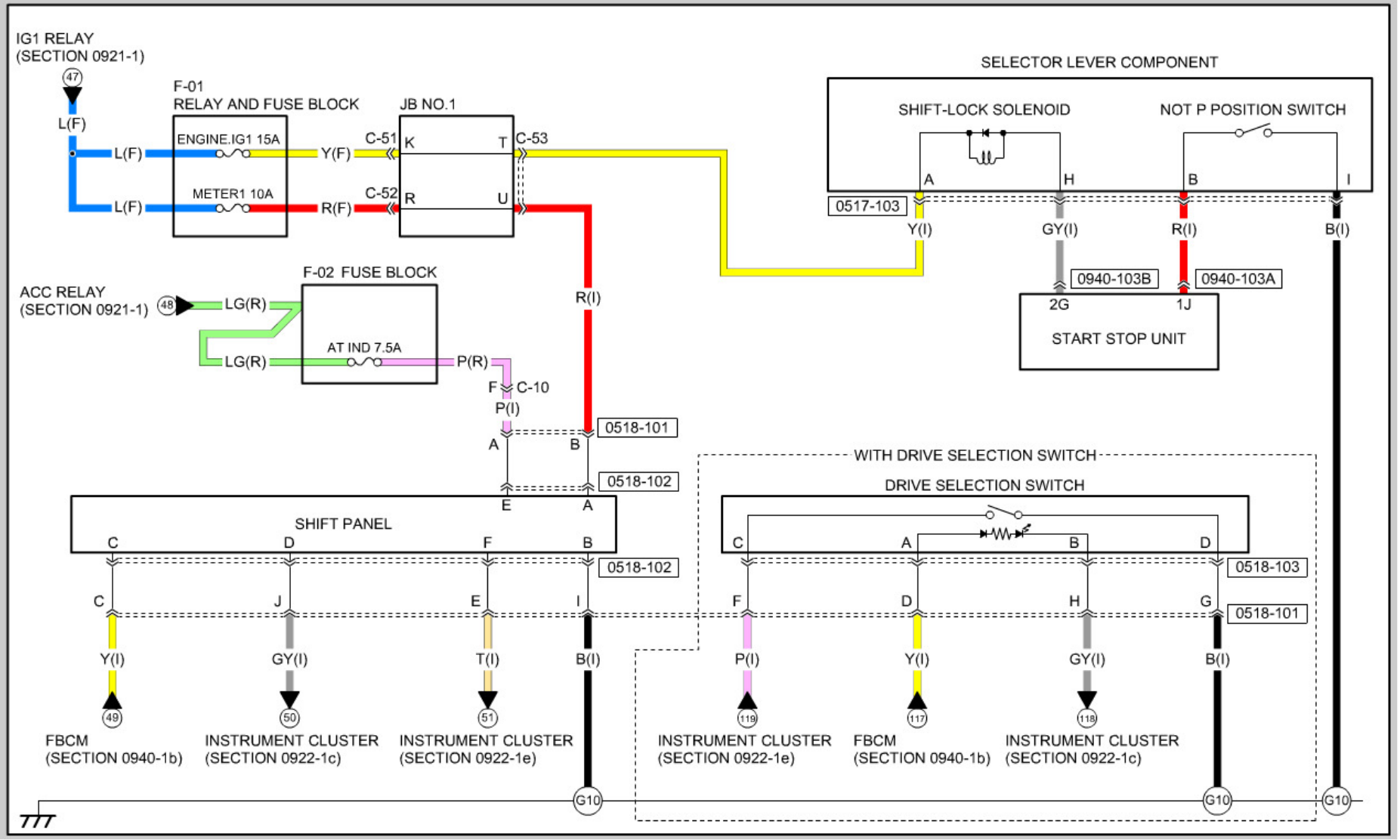
IG1 RELAY
(SECTION 0921-1)
47
L(F)
F-01
RELAY AND FUSE BLOCK
ENGINE.IG1 15A
METER1 10A
L(F)
L(F)
Y(F)
R(F)
C-51
C-52
JB NO.1
K
T
R
U
C-53
R(I)
SELECTOR LEVER COMPONENT
SHIFT-LOCK SOLENOID
NOT P POSITION SWITCH
A
H
B
I
0517-103
Y(I)
GY(I)
R(I)
B(I)
0940-103B
0940-103A
2G
1J
START STOP UNIT
ACC RELAY
(SECTION 0921-1)
48
LG(R)
LG(R)
F-02 FUSE BLOCK
AT IND 7.5A
P(R)
F
C-10
P(I)
0518-101
A
B
0518-102
E
A
SHIFT PANEL
C
D
F
B
0518-102
C
J
E
I
Y(I)
GY(I)
T(I)
B(I)
49
50
51
FBCM
(SECTION 0940-1b)
INSTRUMENT CLUSTER
(SECTION 0922-1c)
INSTRUMENT CLUSTER
(SECTION 0922-1e)
G10
WITH DRIVE SELECTION SWITCH
DRIVE SELECTION SWITCH
C
A
B
D
0518-103
F
D
H
G
0518-101
P(I)
Y(I)
GY(I)
B(I)
119
117
118
INSTRUMENT CLUSTER
(SECTION 0922-1e)
FBCM
(SECTION 0940-1b)
INSTRUMENT CLUSTER
(SECTION 0922-1c)
G10
G10

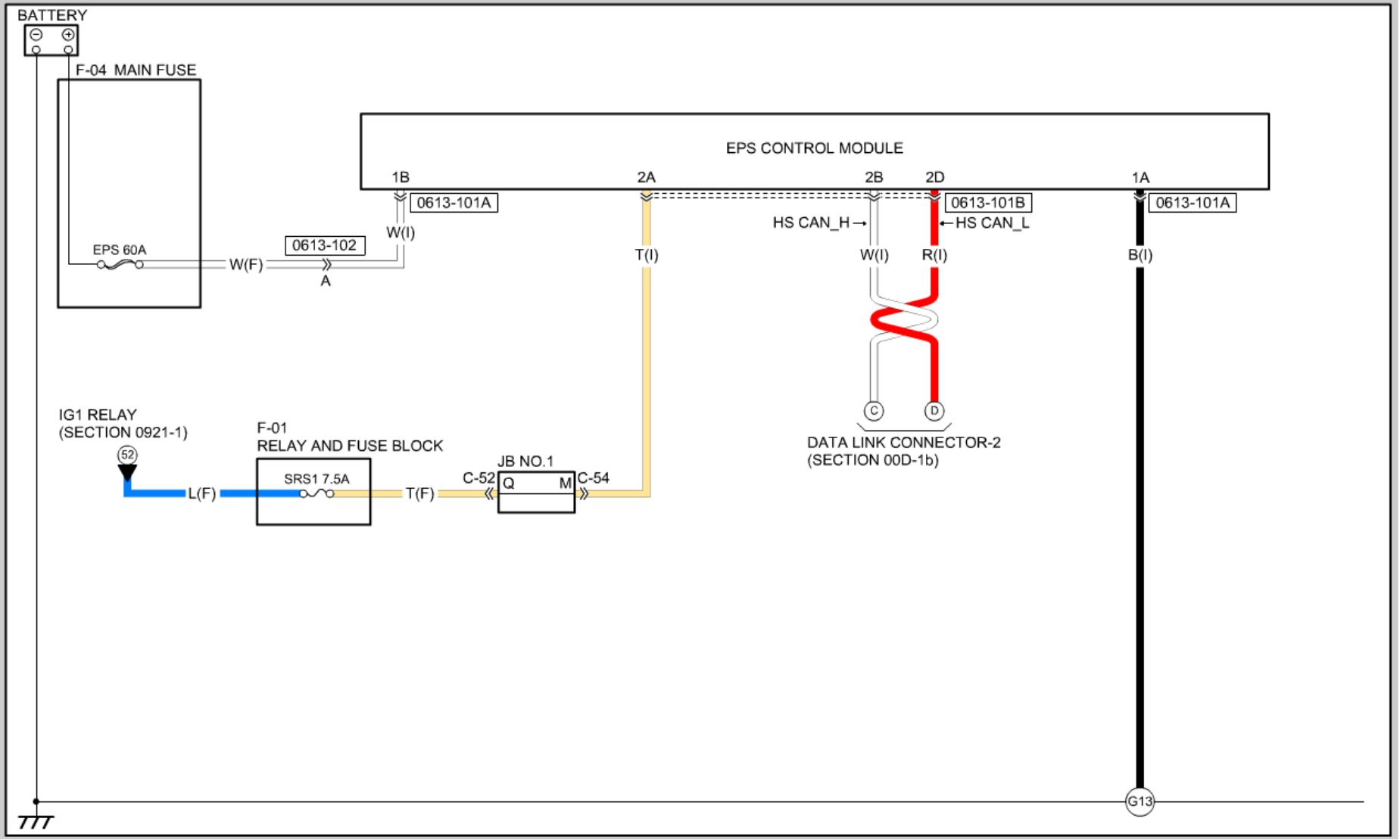
BATTERY
F-04 MAIN FUSE
EPS 60A
W(F)
0613-102
A
W(I)
EPS CONTROL MODULE
1B
2A
2B
2D
1A
0613-101A
0613-101B
0613-101A
HS CAN_H →
← HS CAN_L
T(I)
W(I)
R(I)
B(I)
C
D
DATA LINK CONNECTOR-2
(SECTION 00D-1b)
IG1 RELAY
(SECTION 0921-1)
52
L(F)
F-01
RELAY AND FUSE BLOCK
SRS1 7.5A
T(F)
C-52
JB NO.1
Q
M
C-54
G13

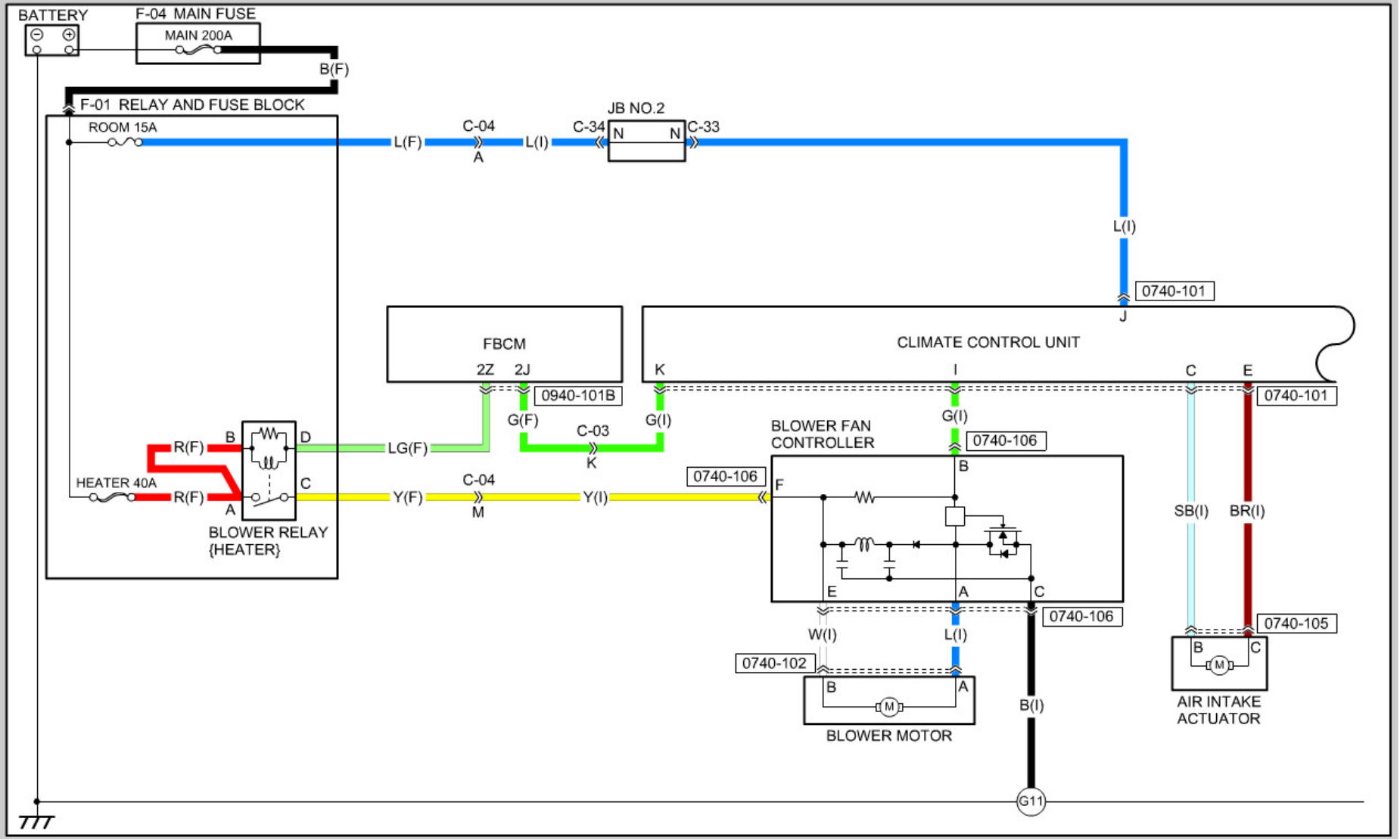
BATTERY
F-04 MAIN FUSE
MAIN 200A
B(F)
F-01 RELAY AND FUSE BLOCK
ROOM 15A
L(F)
C-04
A
L(I)
JB NO.2
C-34
N
N
C-33
L(I)
0740-101
J
FBCM
2Z
2J
0940-101B
CLIMATE CONTROL UNIT
K
I
C
E
0740-101
G(F)
C-03
K
G(I)
G(I)
BLOWER FAN CONTROLLER
0740-106
R(F)
B
D
LG(F)
HEATER 40A
R(F)
A
C
Y(F)
C-04
M
Y(I)
0740-106
F
B
E
A
C
0740-106
SB(I)
BR(I)
0740-105
W(I)
L(I)
0740-102
B
A
BLOWER MOTOR
B(I)
B
C
AIR INTAKE ACTUATOR
BLOWER RELAY {HEATER}
G11

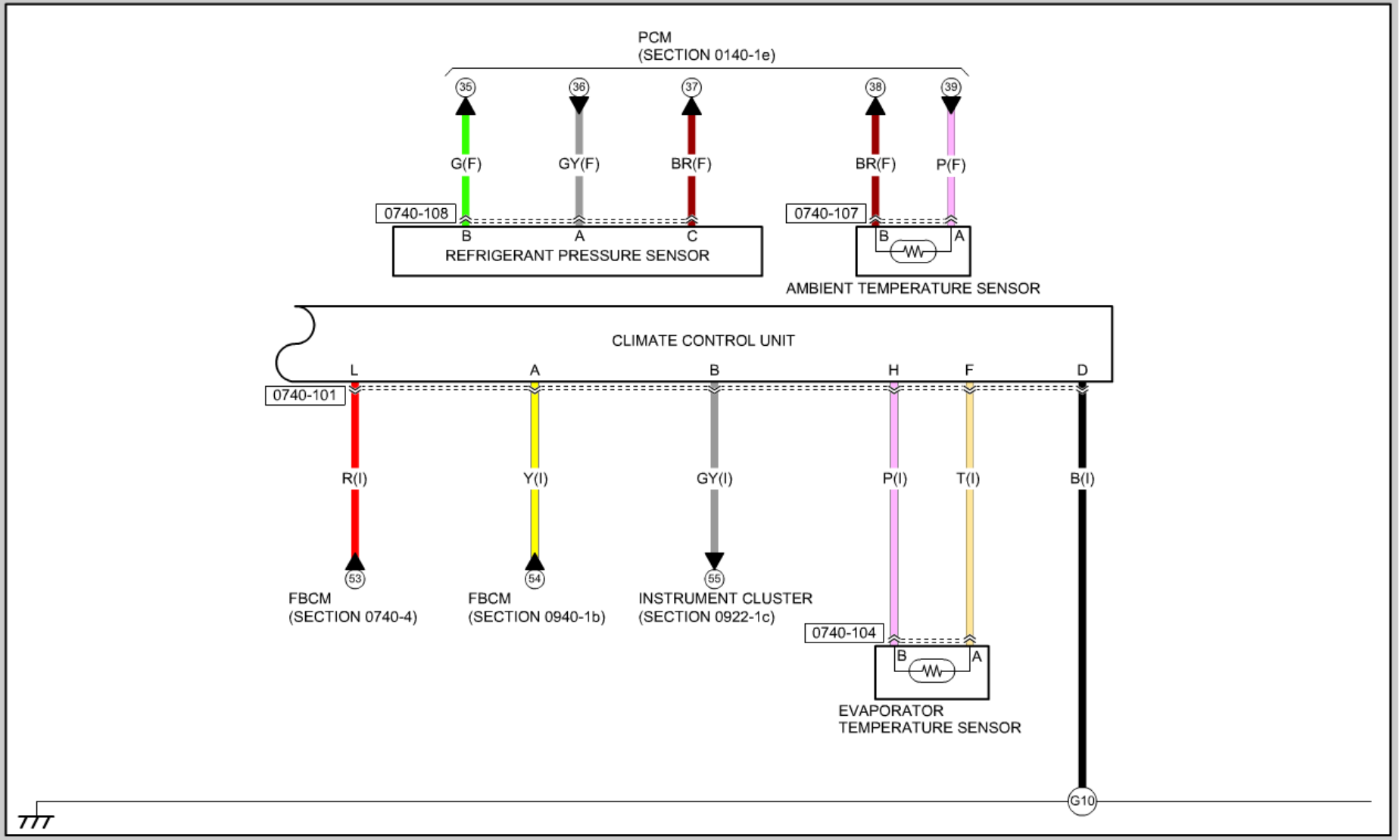
PCM
(SECTION 0140-1e)
35
36
37
38
39
G(F)
GY(F)
BR(F)
BR(F)
P(F)
0740-108
0740-107
B
A
C
REFRIGERANT PRESSURE SENSOR
B
A
AMBIENT TEMPERATURE SENSOR
CLIMATE CONTROL UNIT
L
A
B
H
F
D
0740-101
R(I)
Y(I)
GY(I)
P(I)
T(I)
B(I)
53
54
55
FBCM
(SECTION 0740-4)
FBCM
(SECTION 0940-1b)
INSTRUMENT CLUSTER
(SECTION 0922-1c)
0740-104
B
A
EVAPORATOR
TEMPERATURE SENSOR
G10

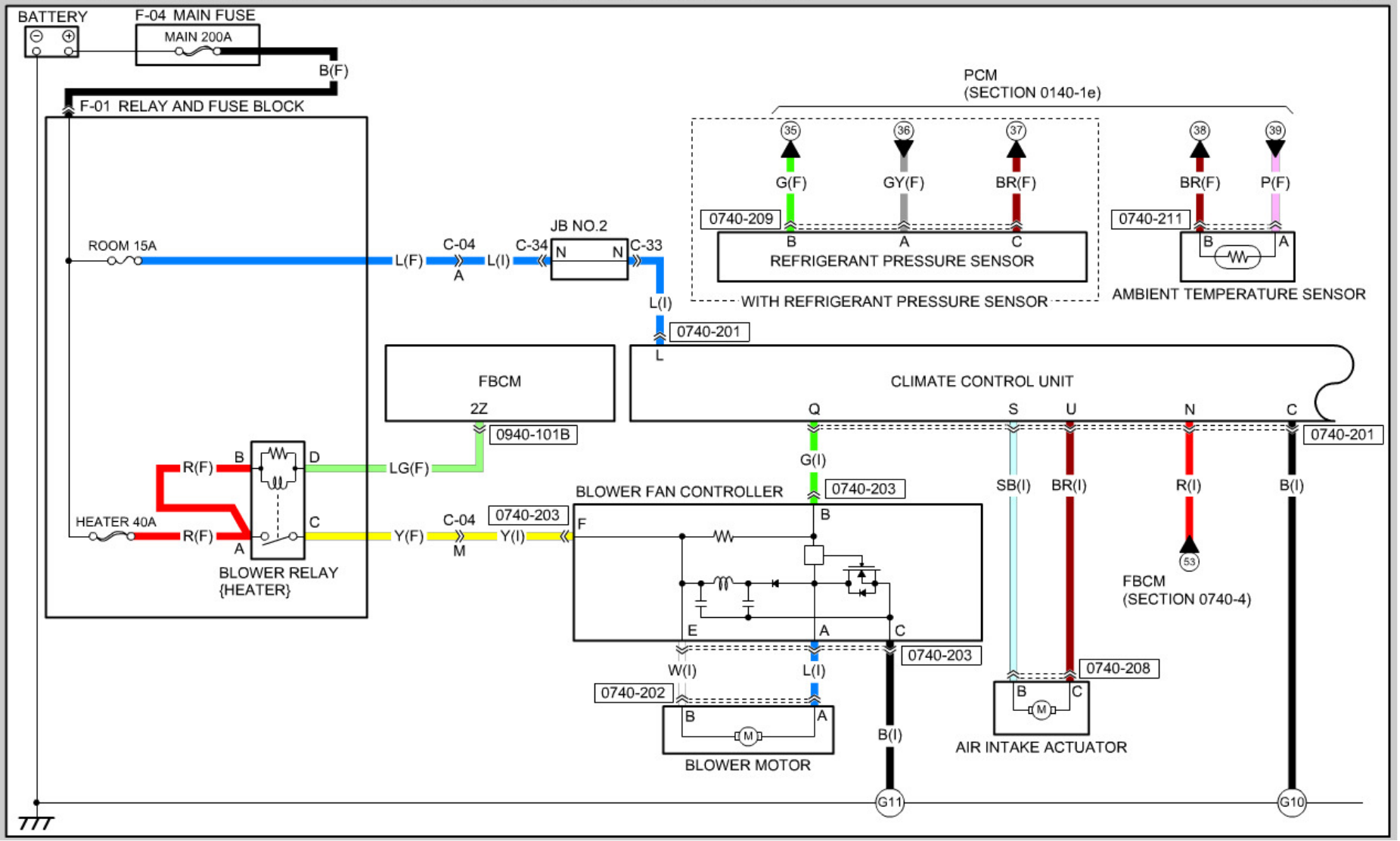
BATTERY
F-04 MAIN FUSE
MAIN 200A
B(F)
F-01 RELAY AND FUSE BLOCK
ROOM 15A
L(F)
C-04
A
L(I)
C-34
JB NO.2
N
N
C-33
L(I)
0740-201
L
PCM
(SECTION 0140-1e)
35
36
37
38
39
G(F)
GY(F)
BR(F)
BR(F)
P(F)
0740-209
B
A
C
REFRIGERANT PRESSURE SENSOR
WITH REFRIGERANT PRESSURE SENSOR
0740-211
B
A
AMBIENT TEMPERATURE SENSOR
FBCM
2Z
0940-101B
CLIMATE CONTROL UNIT
Q
S
U
N
C
0740-201
G(I)
SB(I)
BR(I)
R(I)
B(I)
R(F)
B
D
LG(F)
HEATER 40A
R(F)
A
C
Y(F)
C-04
M
0740-203
Y(I)
BLOWER FAN CONTROLLER
0740-203
F
B
E
A
C
0740-203
W(I)
L(I)
0740-202
B
A
BLOWER MOTOR
BLOWER RELAY
{HEATER}
B(I)
G11
0740-208
B
C
AIR INTAKE ACTUATOR
53
FBCM
(SECTION 0740-4)
G10

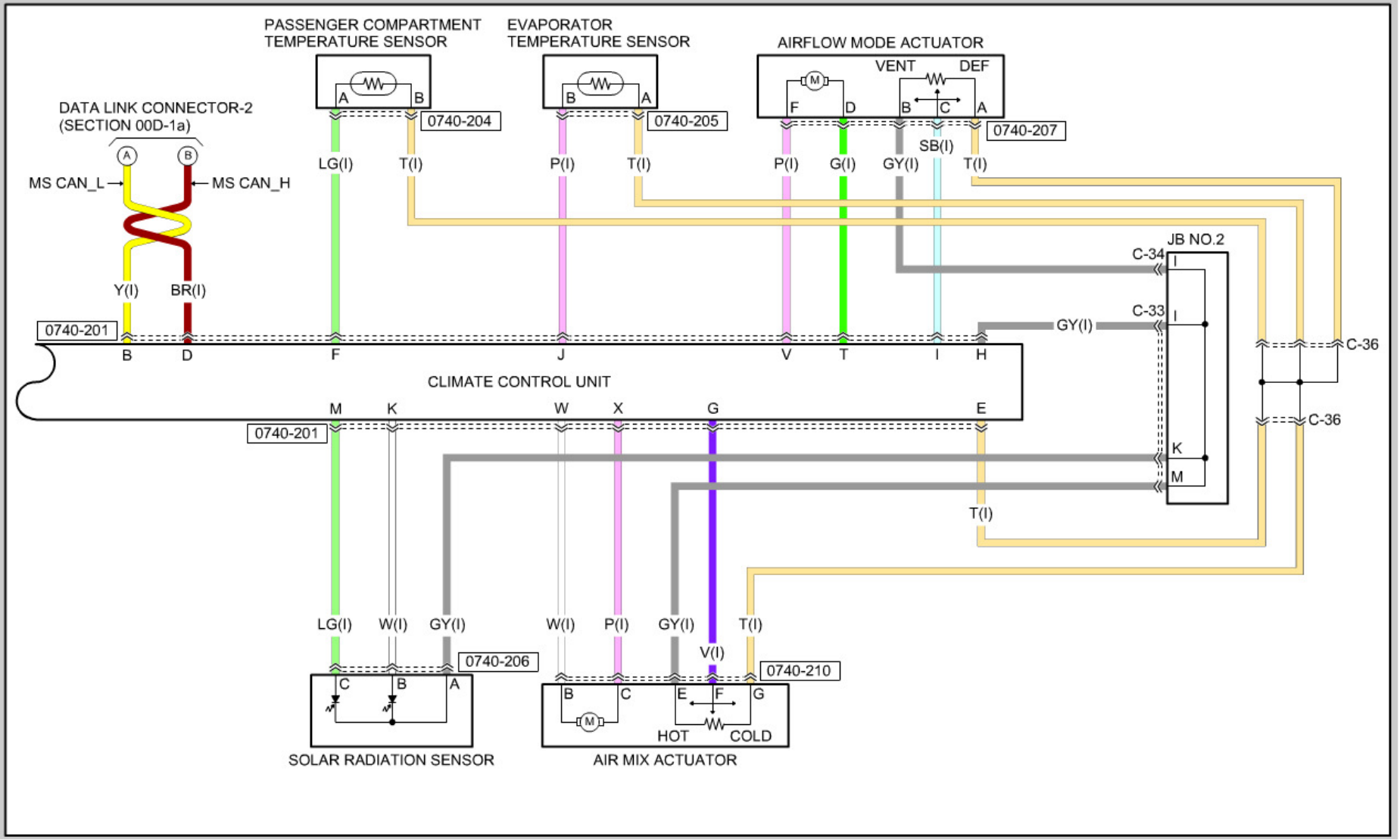
PASSENGER COMPARTMENT TEMPERATURE SENSOR
EVAPORATOR TEMPERATURE SENSOR
AIRFLOW MODE ACTUATOR
VENT
DEF
DATA LINK CONNECTOR-2 (SECTION 00D-1a)
MS CAN_L
MS CAN_H
0740-204
0740-205
0740-207
LG(I)
T(I)
P(I)
T(I)
P(I)
G(I)
GY(I)
SB(I)
T(I)
JB NO.2
C-34
C-33
GY(I)
C-36
C-36
Y(I)
BR(I)
0740-201
CLIMATE CONTROL UNIT
0740-201
T(I)
LG(I)
W(I)
GY(I)
W(I)
P(I)
GY(I)
V(I)
T(I)
0740-206
0740-210
HOT
COLD
SOLAR RADIATION SENSOR
AIR MIX ACTUATOR

HEATER AND AIR CONDITIONER SYSTEM (FULL-AUTO A/C (DUAL))

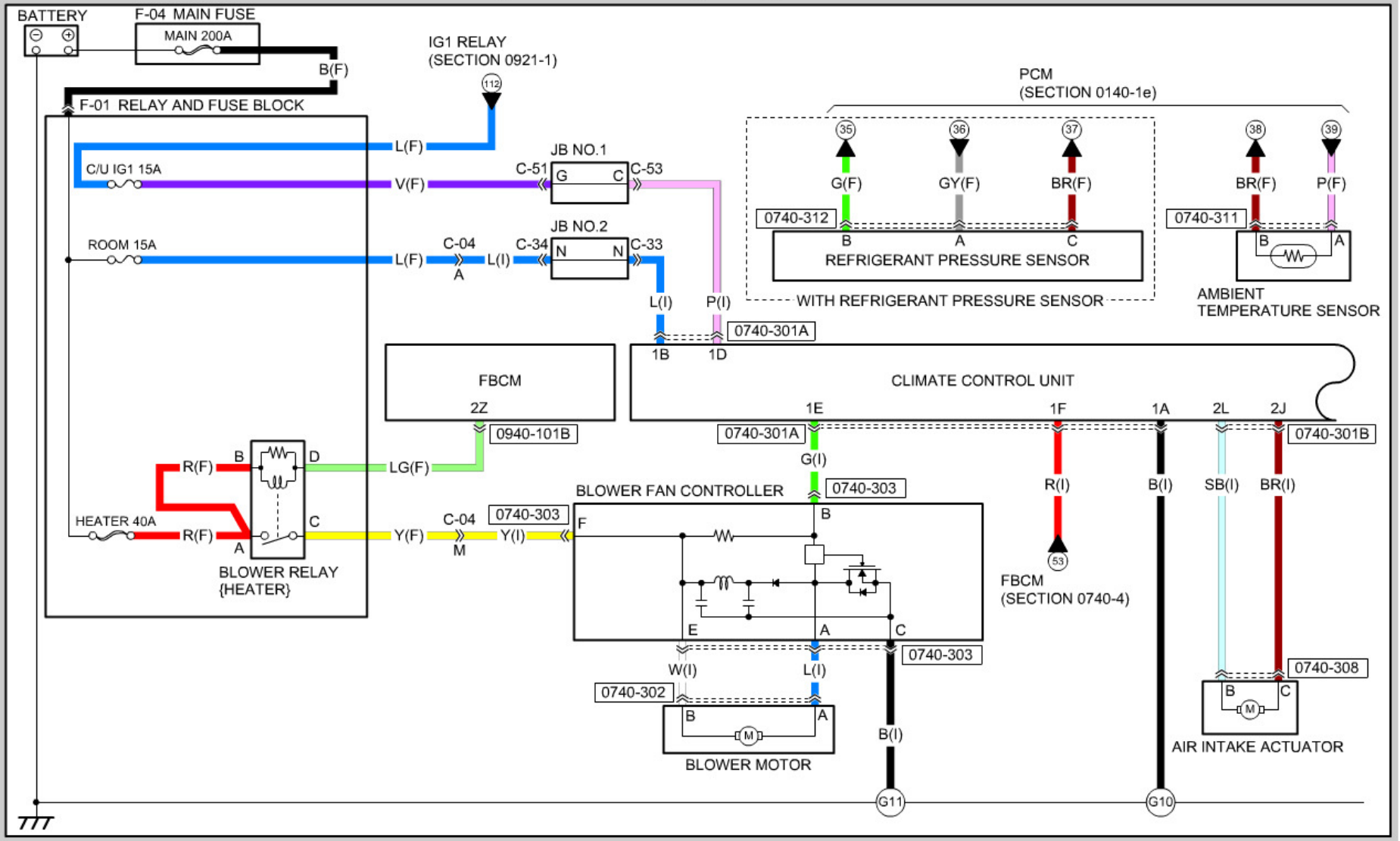

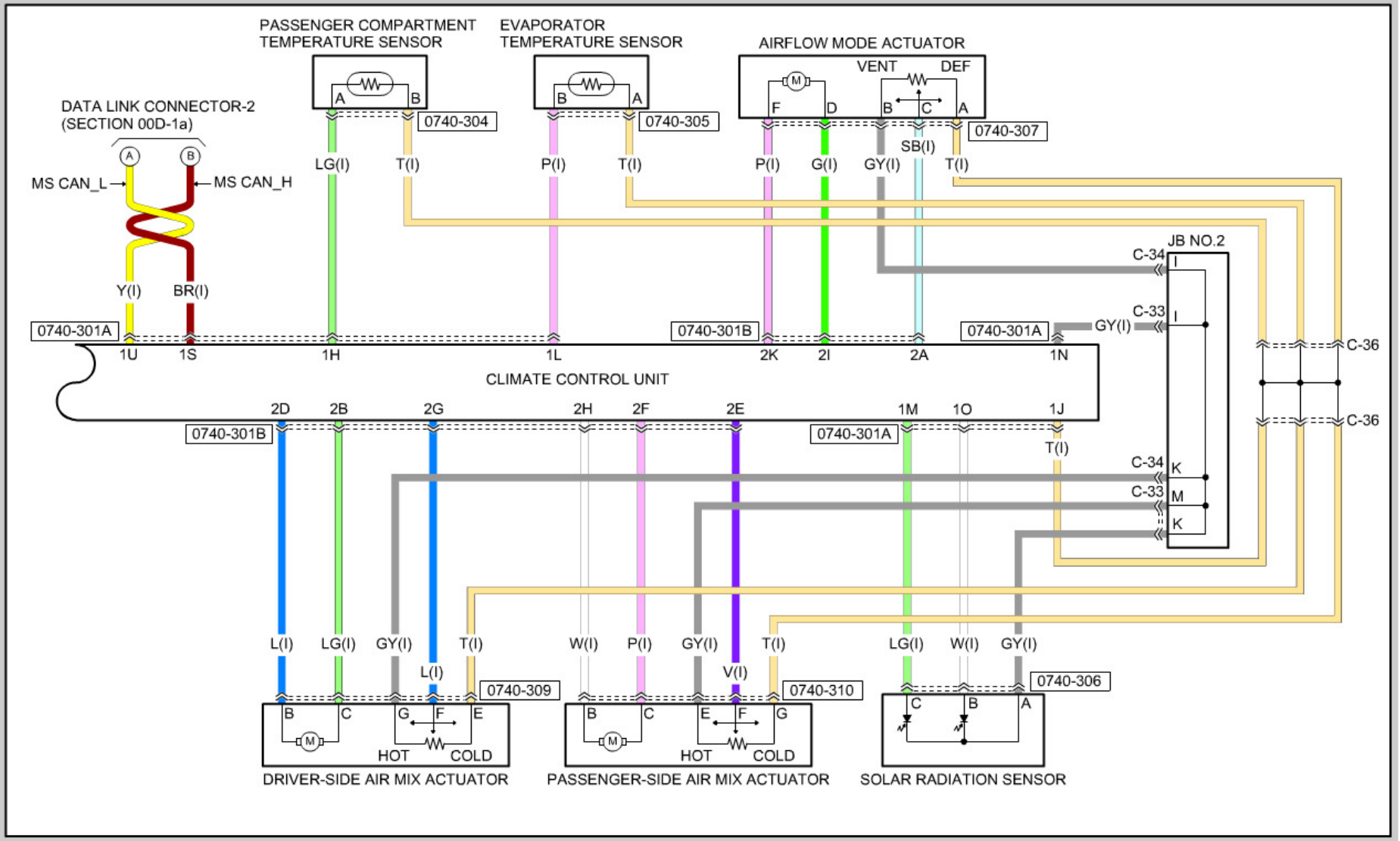
PASSENGER COMPARTMENT TEMPERATURE SENSOR
EVAPORATOR TEMPERATURE SENSOR
AIRFLOW MODE ACTUATOR
VENT
DEF
DATA LINK CONNECTOR-2 (SECTION 00D-1a)
MS CAN_L
MS CAN_H
0740-304
0740-305
0740-307
LG(I)
T(I)
P(I)
G(I)
GY(I)
SB(I)
Y(I)
BR(I)
JB NO.2
C-34
C-33
C-36
0740-301A
0740-301B
1U
1S
1H
1L
2K
2I
2A
1N
CLIMATE CONTROL UNIT
2D
2B
2G
2H
2F
2E
1M
1O
1J
L(I)
W(I)
V(I)
0740-309
0740-310
0740-306
HOT
COLD
DRIVER-SIDE AIR MIX ACTUATOR
PASSENGER-SIDE AIR MIX ACTUATOR
SOLAR RADIATION SENSOR

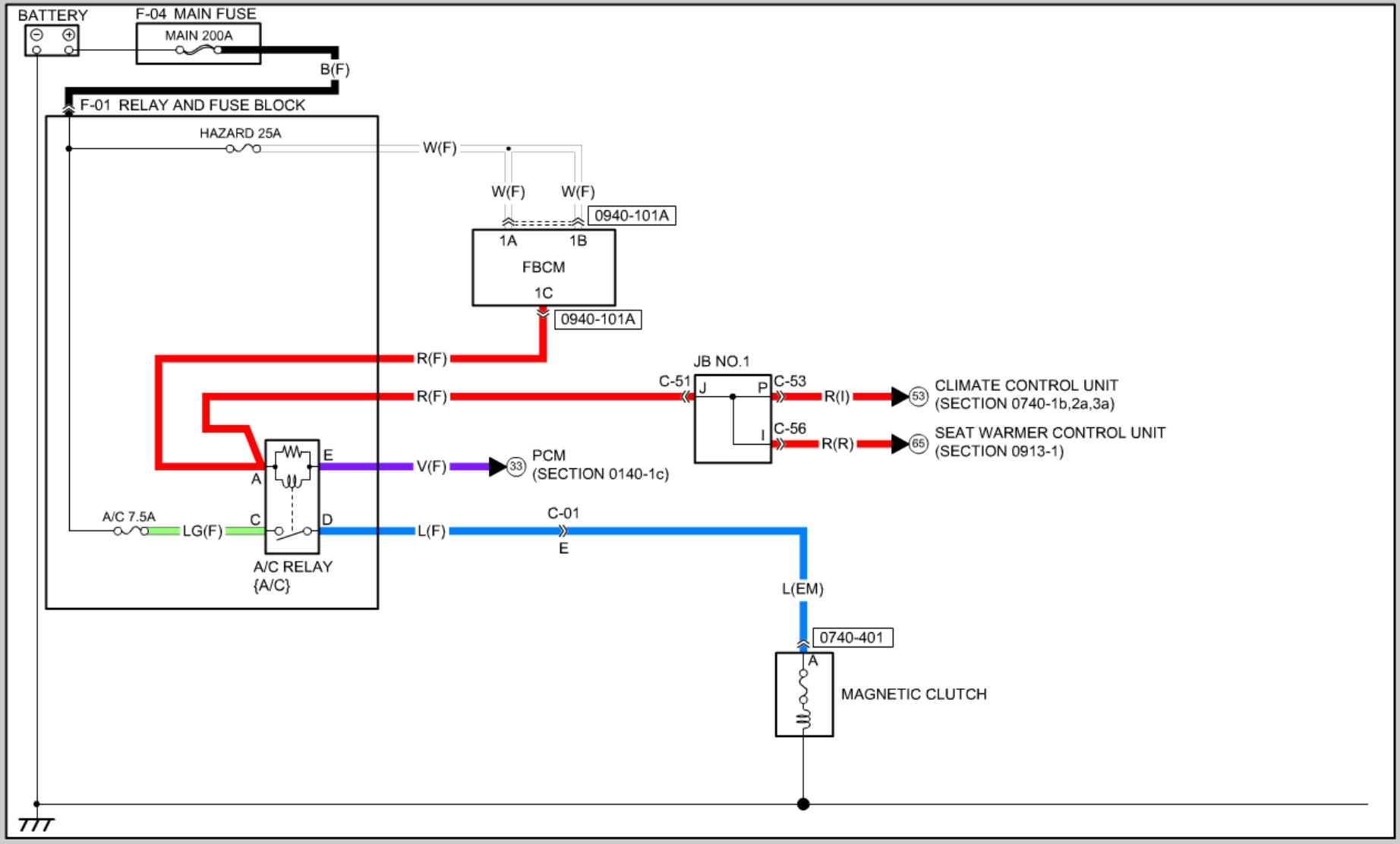
BATTERY
F-04 MAIN FUSE
MAIN 200A
B(F)
F-01 RELAY AND FUSE BLOCK
HAZARD 25A
W(F)
W(F)
W(F)
0940-101A
1A
1B
FBCM
1C
0940-101A
R(F)
R(F)
JB NO.1
C-51
J
P
C-53
R(I)
53
CLIMATE CONTROL UNIT
(SECTION 0740-1b,2a,3a)
I
C-56
R(R)
65
SEAT WARMER CONTROL UNIT
(SECTION 0913-1)
E
V(F)
33
PCM
(SECTION 0140-1c)
A
A/C 7.5A
LG(F)
C
D
L(F)
C-01
E
A/C RELAY
{A/C}
L(EM)
0740-401
A
MAGNETIC CLUTCH

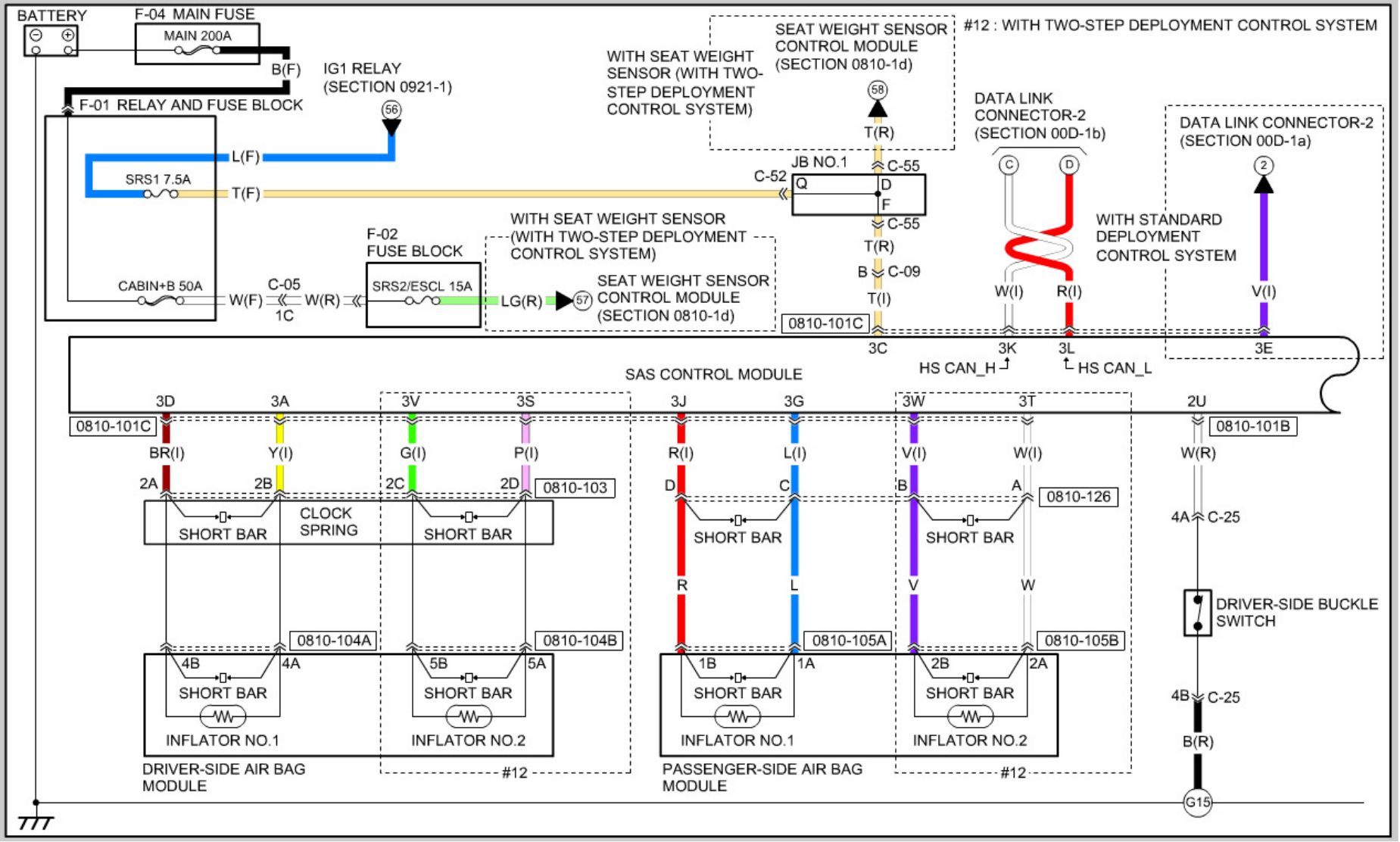
BATTERY
F-04 MAIN FUSE
MAIN 200A
B(F)
IG1 RELAY
(SECTION 0921-1)
F-01 RELAY AND FUSE BLOCK
56
L(F)
SRS1 7.5A
T(F)
CABIN+B 50A
W(F)
C-05
1C
W(R)
F-02
FUSE BLOCK
SRS2/ESCL 15A
LG(R)
57
WITH SEAT WEIGHT SENSOR
(WITH TWO-STEP DEPLOYMENT
CONTROL SYSTEM)
SEAT WEIGHT SENSOR
CONTROL MODULE
(SECTION 0810-1d)
WITH SEAT WEIGHT
SENSOR (WITH TWO-
STEP DEPLOYMENT
CONTROL SYSTEM)
SEAT WEIGHT SENSOR
CONTROL MODULE
(SECTION 0810-1d)
58
T(R)
C-52
JB NO.1
Q
D
F
C-55
C-55
T(R)
B
C-09
T(I)
0810-101C
3C
#12 : WITH TWO-STEP DEPLOYMENT CONTROL SYSTEM
DATA LINK
CONNECTOR-2
(SECTION 00D-1b)
C
D
W(I)
R(I)
3K
3L
HS CAN_H
HS CAN_L
WITH STANDARD
DEPLOYMENT
CONTROL SYSTEM
DATA LINK CONNECTOR-2
(SECTION 00D-1a)
2
V(I)
3E
SAS CONTROL MODULE
3D
3A
3V
3S
3J
3G
3W
3T
2U
0810-101C
0810-101B
BR(I)
Y(I)
G(I)
P(I)
R(I)
L(I)
V(I)
W(I)
W(R)
2A
2B
2C
2D
0810-103
D
C
B
A
0810-126
SHORT BAR
CLOCK
SPRING
SHORT BAR
SHORT BAR
SHORT BAR
4A
C-25
R
L
V
W
DRIVER-SIDE BUCKLE
SWITCH
0810-104A
0810-104B
0810-105A
0810-105B
4B
4A
5B
5A
1B
1A
2B
2A
SHORT BAR
SHORT BAR
SHORT BAR
SHORT BAR
4B
C-25
INFLATOR NO.1
INFLATOR NO.2
INFLATOR NO.1
INFLATOR NO.2
B(R)
DRIVER-SIDE AIR BAG
MODULE
#12
PASSENGER-SIDE AIR BAG
MODULE
#12
G15

AIR BAG SYSTEM (INCLUDES PRE-TENSIONER SEAT BELT INFORMATION)

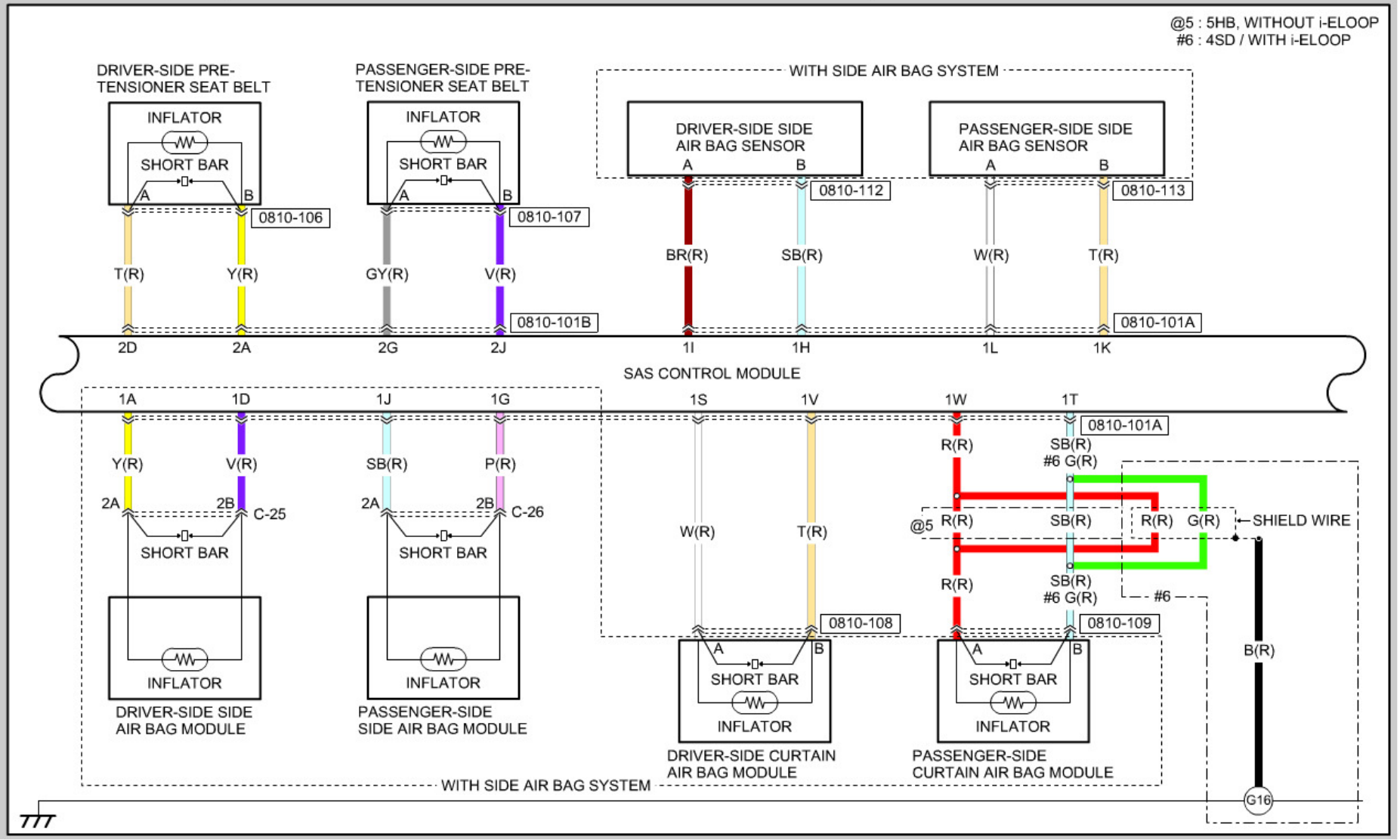

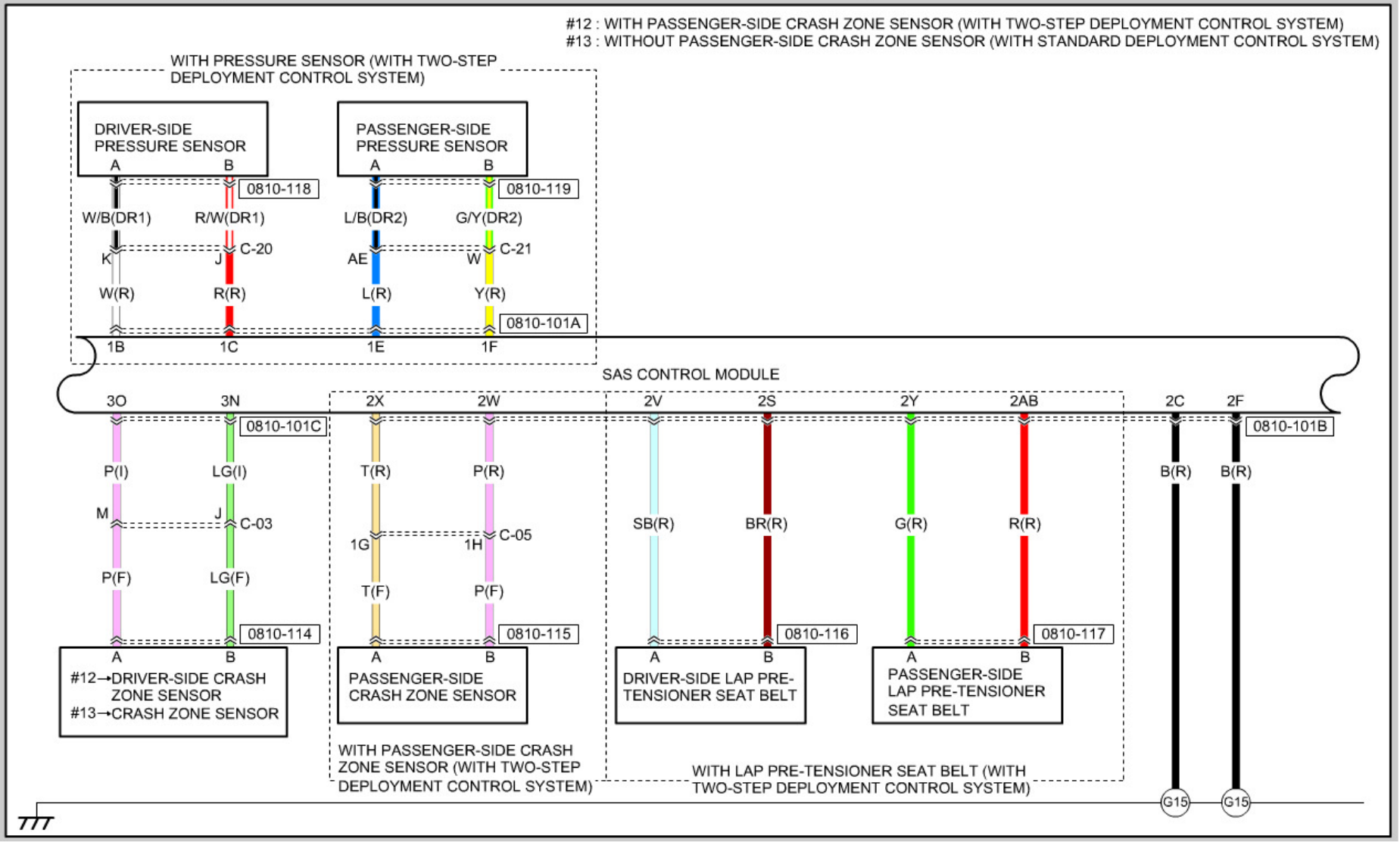
#12 : WITH PASSENGER-SIDE CRASH ZONE SENSOR (WITH TWO-STEP DEPLOYMENT CONTROL SYSTEM)
#13 : WITHOUT PASSENGER-SIDE CRASH ZONE SENSOR (WITH STANDARD DEPLOYMENT CONTROL SYSTEM)
WITH PRESSURE SENSOR (WITH TWO-STEP DEPLOYMENT CONTROL SYSTEM)
DRIVER-SIDE PRESSURE SENSOR
PASSENGER-SIDE PRESSURE SENSOR
A
B
0810-118
0810-119
W/B(DR1)
R/W(DR1)
L/B(DR2)
G/Y(DR2)
K
J
C-20
AE
W
C-21
W(R)
R(R)
L(R)
Y(R)
0810-101A
1B
1C
1E
1F
SAS CONTROL MODULE
3O
3N
2X
2W
2V
2S
2Y
2AB
2C
2F
0810-101C
0810-101B
P(I)
LG(I)
T(R)
P(R)
B(R)
B(R)
M
J
C-03
1G
1H
C-05
SB(R)
BR(R)
G(R)
R(R)
P(F)
LG(F)
T(F)
P(F)
0810-114
0810-115
0810-116
0810-117
#12→DRIVER-SIDE CRASH ZONE SENSOR
#13→CRASH ZONE SENSOR
PASSENGER-SIDE CRASH ZONE SENSOR
DRIVER-SIDE LAP PRE-TENSIONER SEAT BELT
PASSENGER-SIDE LAP PRE-TENSIONER SEAT BELT
WITH PASSENGER-SIDE CRASH ZONE SENSOR (WITH TWO-STEP DEPLOYMENT CONTROL SYSTEM)
WITH LAP PRE-TENSIONER SEAT BELT (WITH TWO-STEP DEPLOYMENT CONTROL SYSTEM)
G15
G15

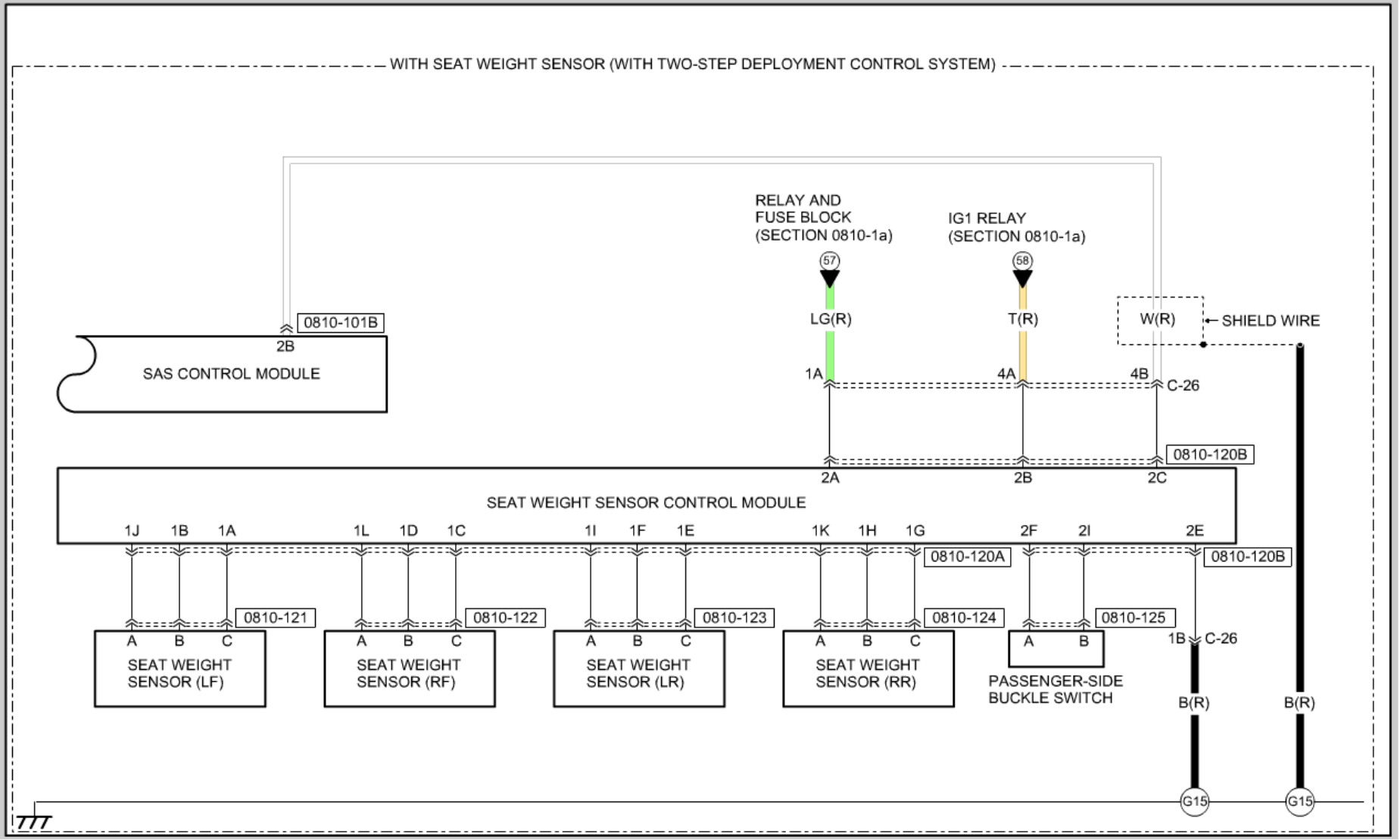
WITH SEAT WEIGHT SENSOR (WITH TWO-STEP DEPLOYMENT CONTROL SYSTEM)
RELAY AND FUSE BLOCK (SECTION 0810-1a)
IG1 RELAY (SECTION 0810-1a)
57
58
LG(R)
T(R)
W(R)
SHIELD WIRE
0810-101B
2B
SAS CONTROL MODULE
1A
4A
4B
C-26
0810-120B
2A
2B
2C
SEAT WEIGHT SENSOR CONTROL MODULE
1J 1B 1A
1L 1D 1C
1I 1F 1E
1K 1H 1G
2F 2I
2E
0810-120A
0810-120B
0810-121
0810-122
0810-123
0810-124
0810-125
A B C
SEAT WEIGHT SENSOR (LF)
SEAT WEIGHT SENSOR (RF)
SEAT WEIGHT SENSOR (LR)
SEAT WEIGHT SENSOR (RR)
A B
PASSENGER-SIDE BUCKLE SWITCH
1B C-26
B(R)
B(R)
G15
G15

REAR WINDOW DEFROSTER (INCLUDES HEATED OUTER MIRROR INFORMATION)

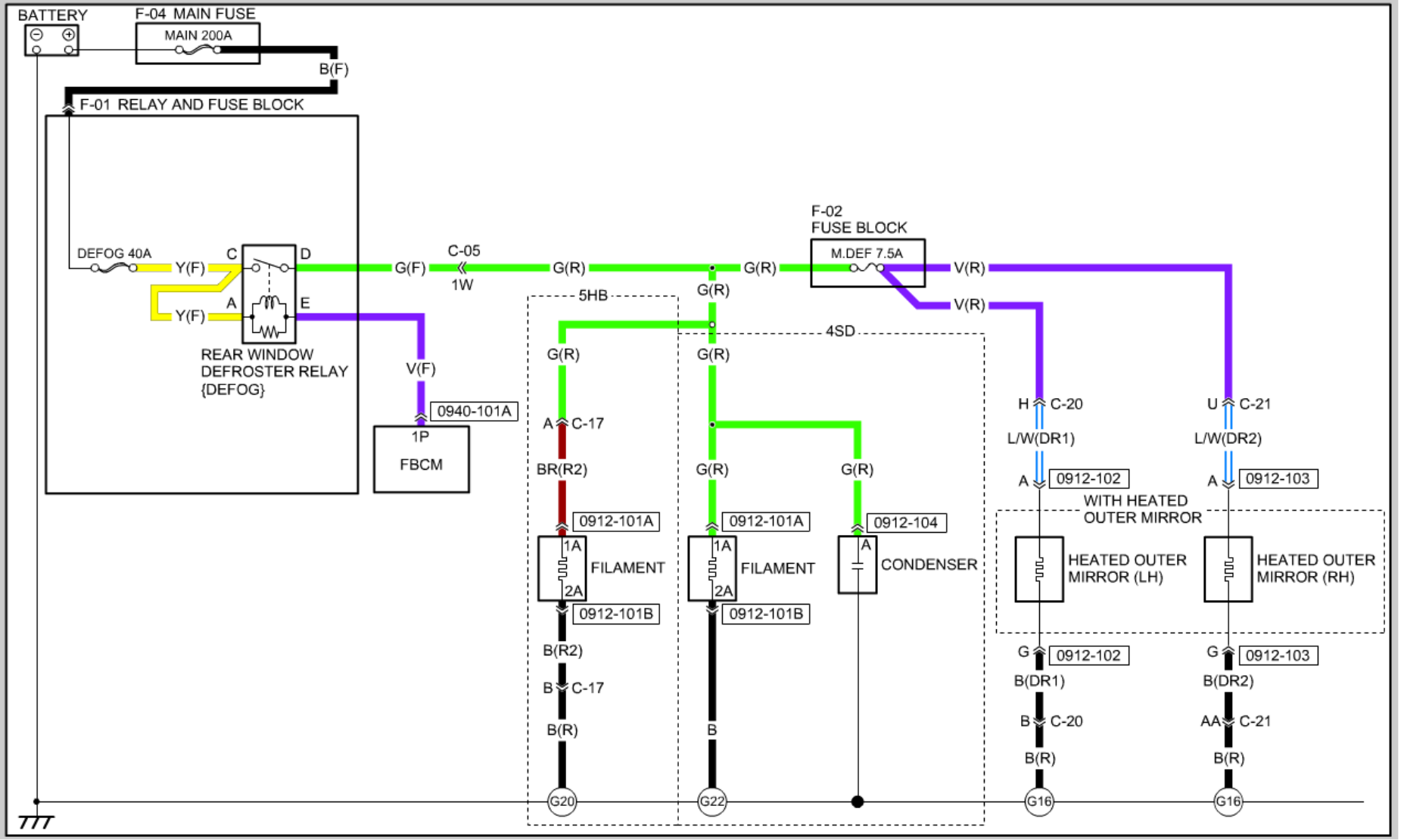

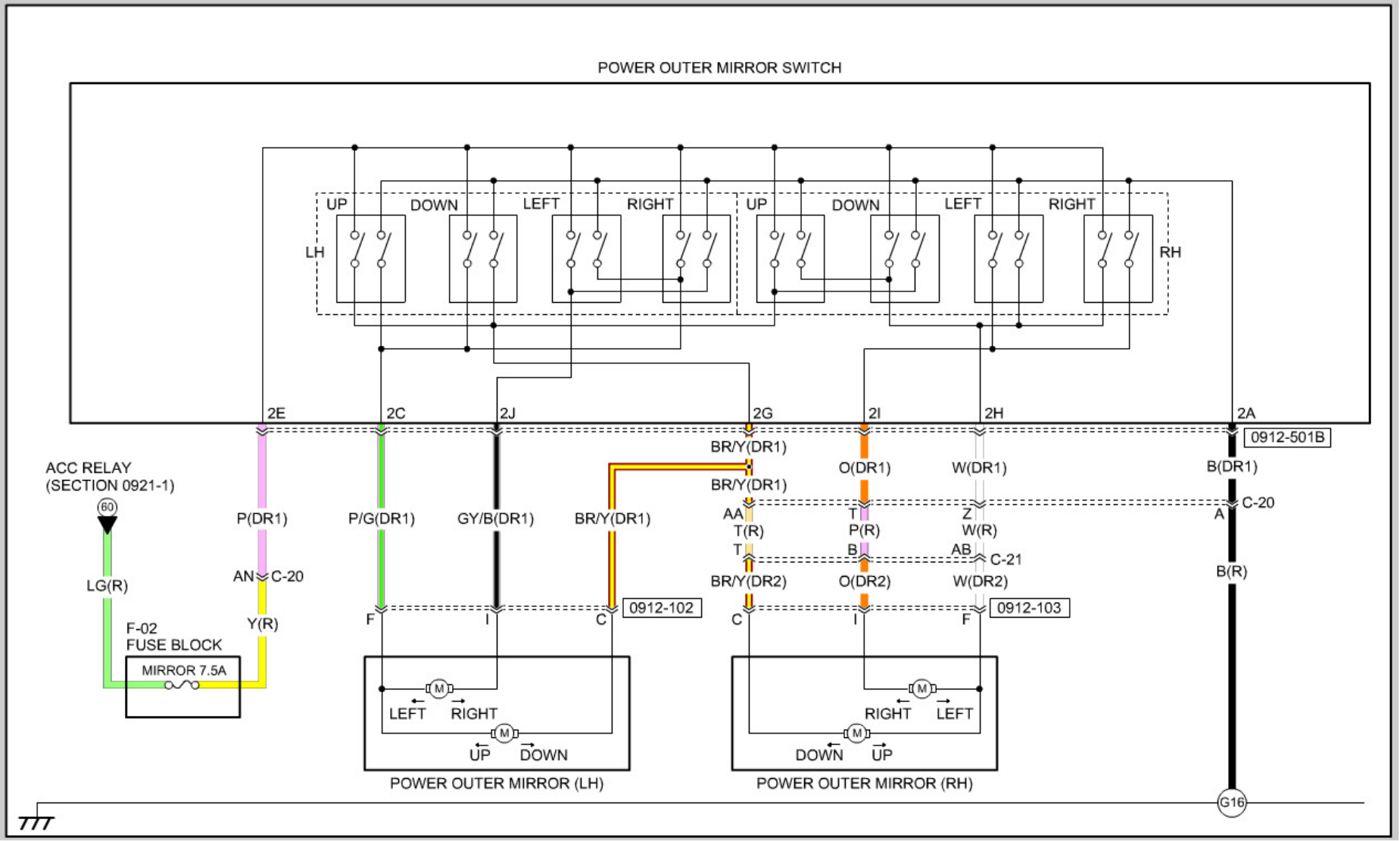
POWER OUTER MIRROR SWITCH
UP
DOWN
LEFT
RIGHT
LH
RH
2E
2C
2J
2G
2I
2H
2A
0912-501B
ACC RELAY
(SECTION 0921-1)
60
P(DR1)
P/G(DR1)
GY/B(DR1)
BR/Y(DR1)
O(DR1)
W(DR1)
B(DR1)
C-20
AN
Y(R)
LG(R)
AA
T(R)
T
P(R)
B
Z
W(R)
AB
C-21
BR/Y(DR2)
O(DR2)
W(DR2)
B(R)
F
I
C
0912-102
0912-103
F-02
FUSE BLOCK
MIRROR 7.5A
M
LEFT
RIGHT
UP
DOWN
POWER OUTER MIRROR (LH)
POWER OUTER MIRROR (RH)
G16

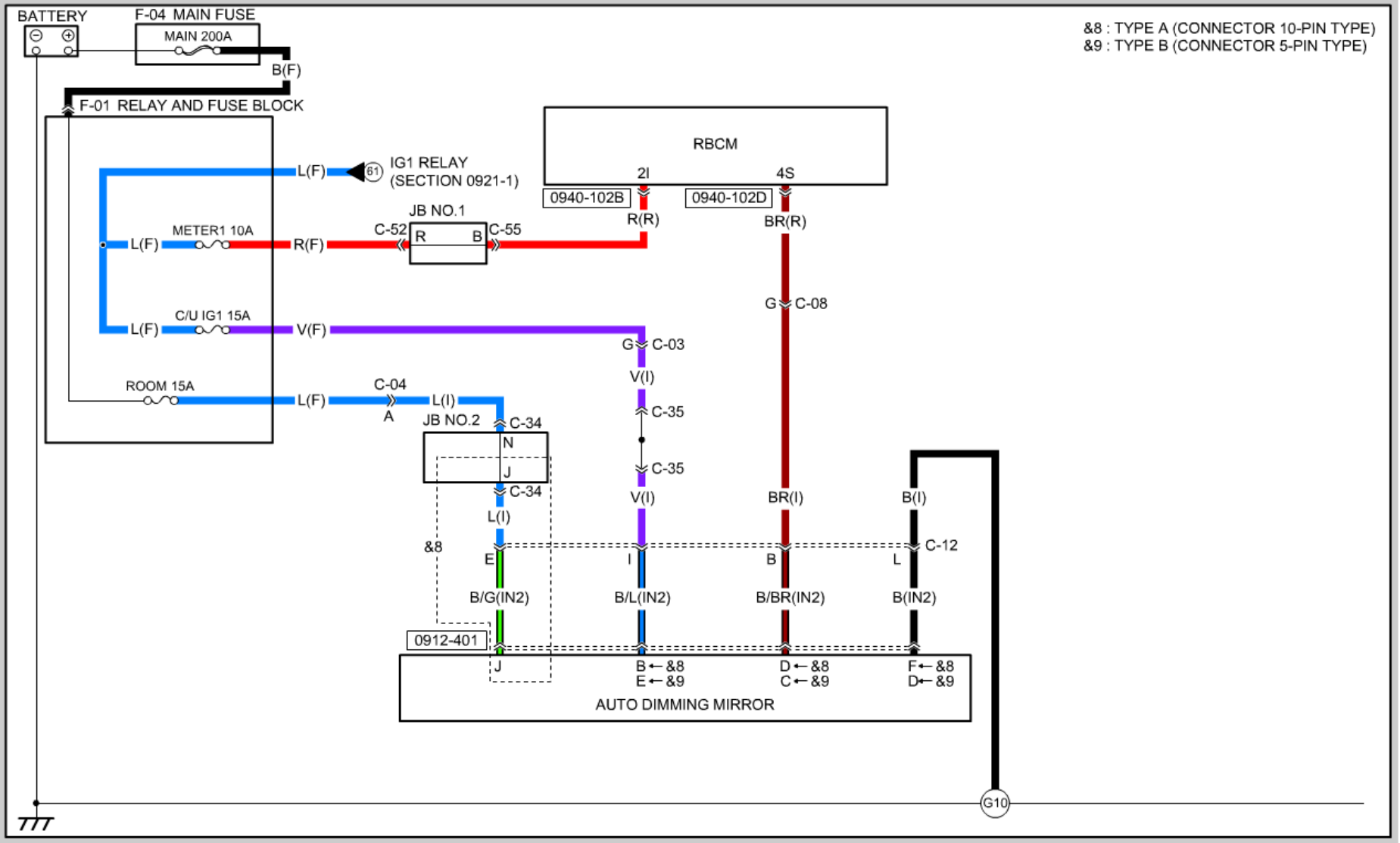
BATTERY
F-04 MAIN FUSE
MAIN 200A
B(F)
F-01 RELAY AND FUSE BLOCK
&8 : TYPE A (CONNECTOR 10-PIN TYPE)
&9 : TYPE B (CONNECTOR 5-PIN TYPE)
RBCM
2I
4S
0940-102B
0940-102D
L(F)
61
IG1 RELAY
(SECTION 0921-1)
JB NO.1
C-52
R
B
C-55
R(R)
BR(R)
METER1 10A
L(F)
R(F)
G
C-08
C/U IG1 15A
L(F)
V(F)
G
C-03
V(I)
ROOM 15A
L(F)
C-04
A
L(I)
C-35
JB NO.2
C-34
N
J
C-35
C-34
V(I)
BR(I)
B(I)
L(I)
&8
E
I
B
L
C-12
B/G(IN2)
B/L(IN2)
B/BR(IN2)
B(IN2)
0912-401
J
B ← &8
E ← &9
D ← &8
C ← &9
F ← &8
D ← &9
AUTO DIMMING MIRROR
G10

POWER WINDOW SYSTEM (AUTO-OPEN/CLOSE FUNCTION FOR DRIVER-SIDE WINDOW)

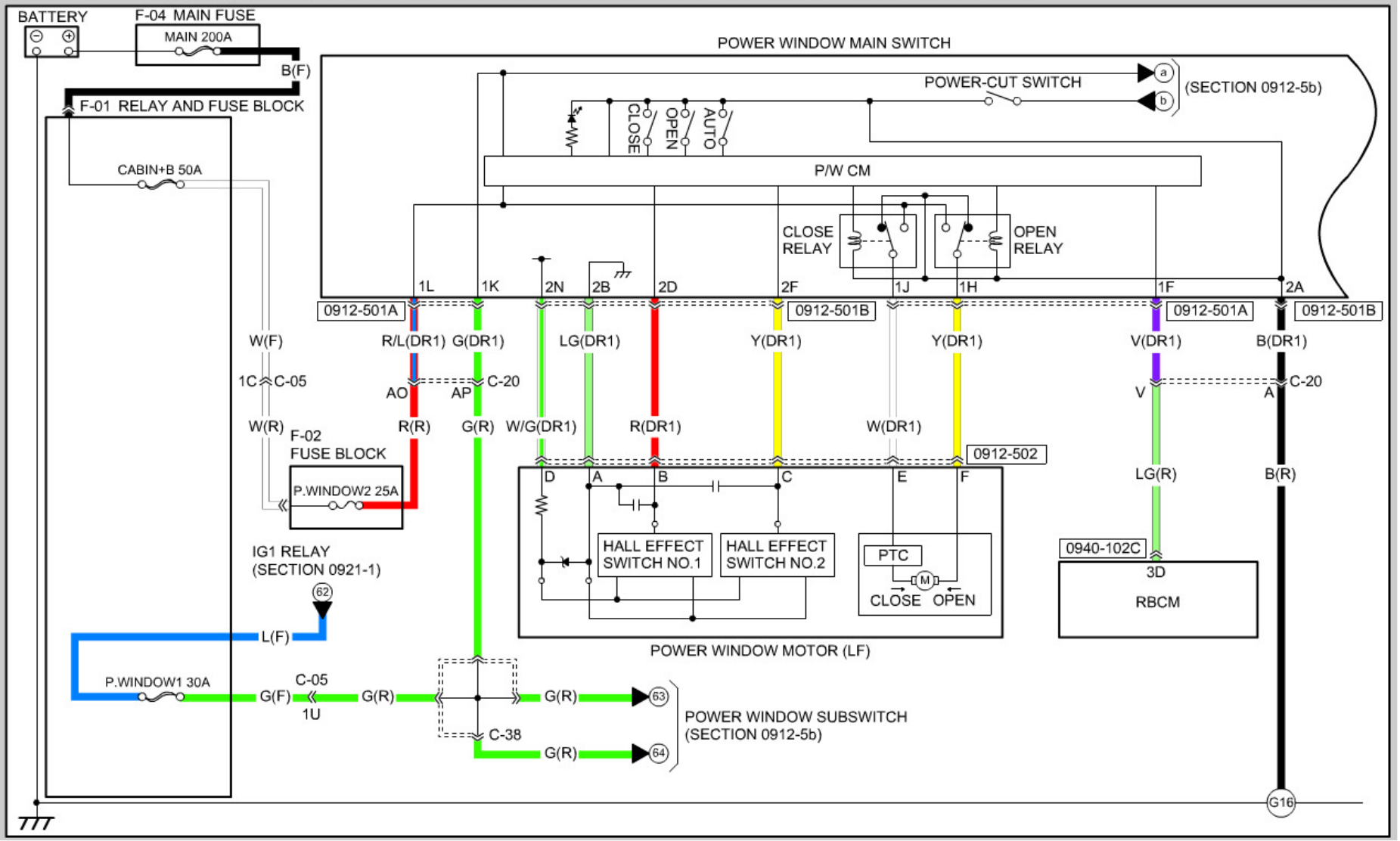

POWER WINDOW SYSTEM (AUTO-OPEN/CLOSE FUNCTION FOR DRIVER-SIDE WINDOW)

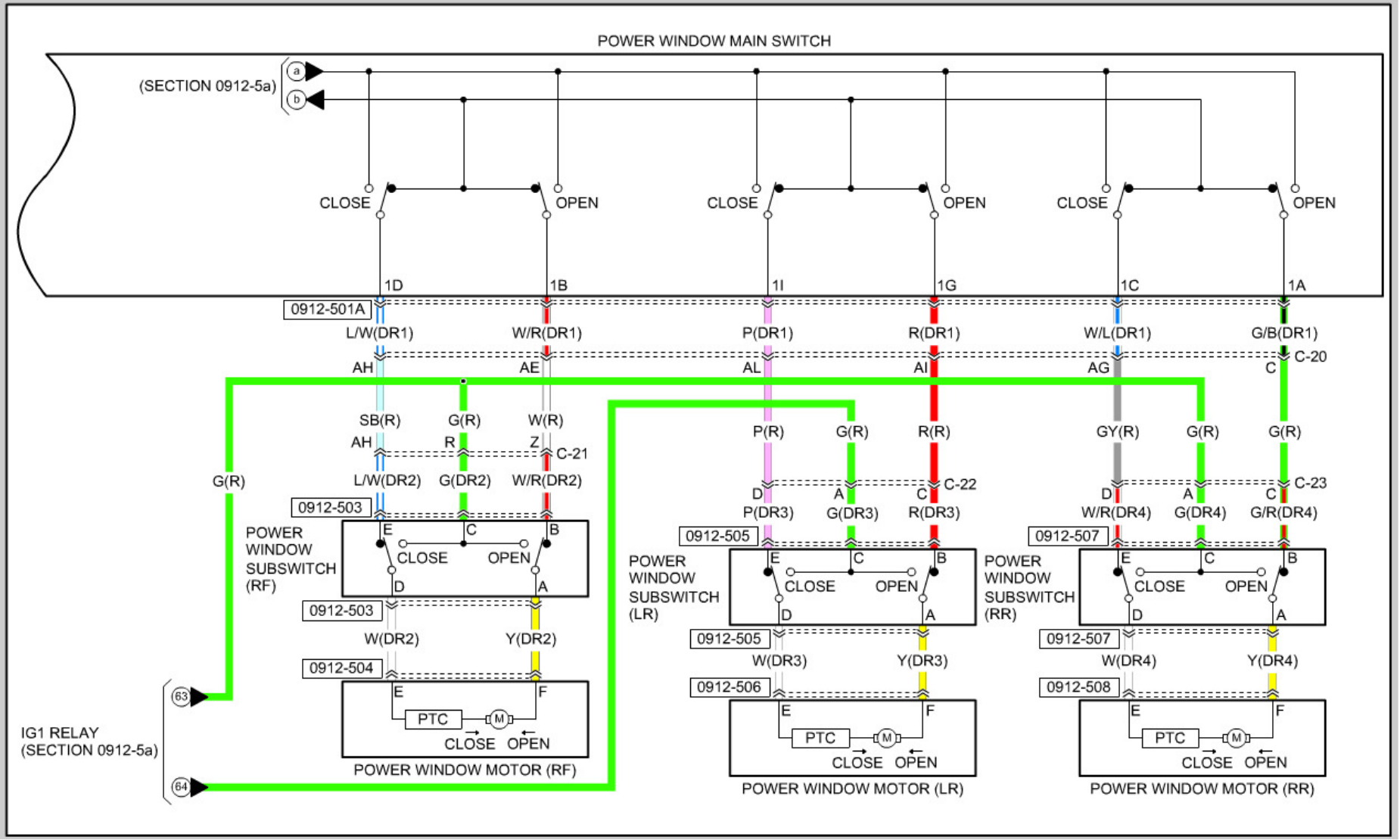

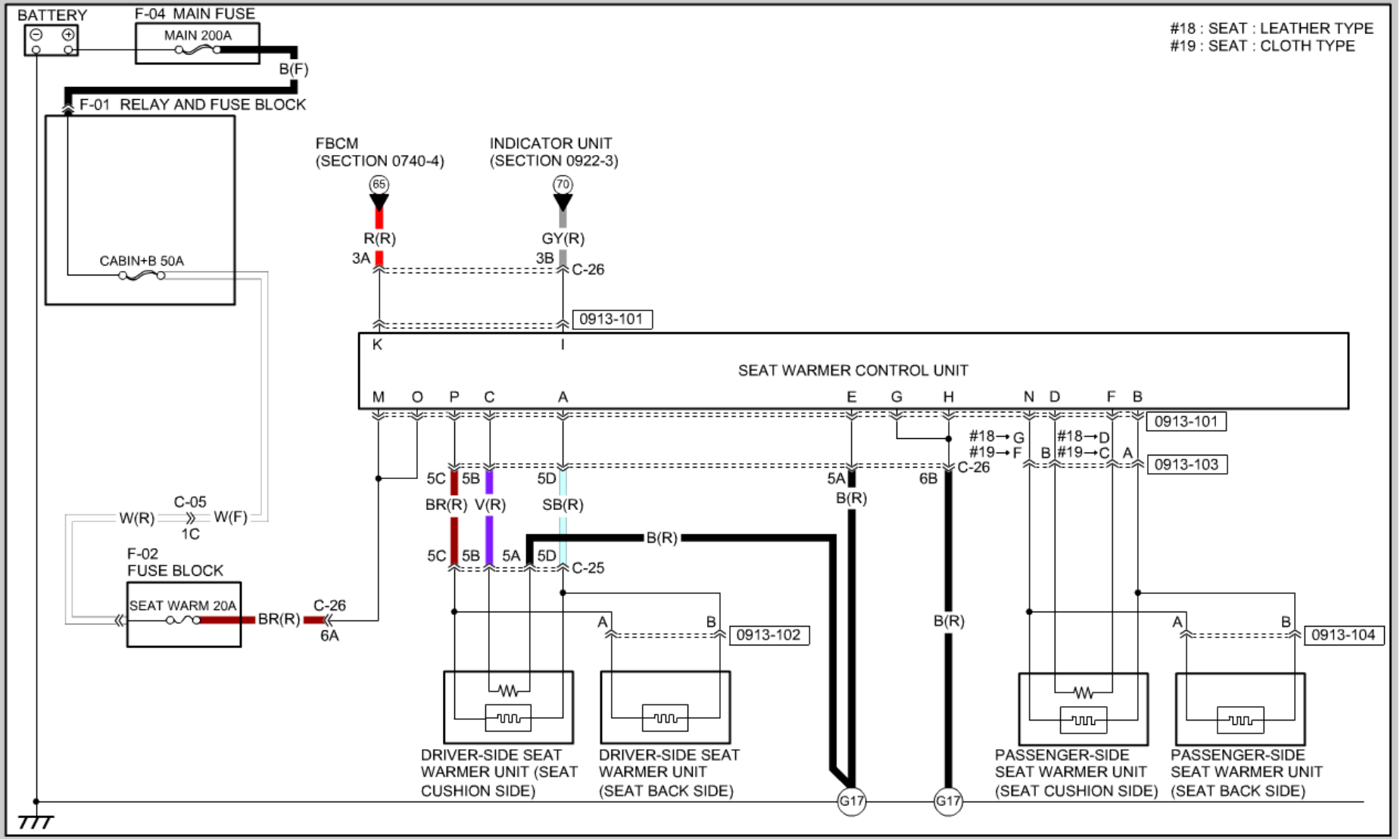
BATTERY
F-04 MAIN FUSE
MAIN 200A
B(F)
F-01 RELAY AND FUSE BLOCK
CABIN+B 50A
#18 : SEAT : LEATHER TYPE
#19 : SEAT : CLOTH TYPE
FBCM
(SECTION 0740-4)
INDICATOR UNIT
(SECTION 0922-3)
65
70
R(R)
GY(R)
3A
3B
C-26
0913-101
K
I
SEAT WARMER CONTROL UNIT
M O P C A E G H N D F B
0913-101
#18→G
#19→F
#18→D
#19→C
B A
0913-103
5C 5B 5D
BR(R) V(R) SB(R)
5A 6B
C-26
B(R)
C-05
W(R) W(F)
1C
B(R)
5C 5B 5A 5D
C-25
F-02
FUSE BLOCK
SEAT WARM 20A
BR(R)
C-26
6A
A B
0913-102
B(R)
A B
0913-104
DRIVER-SIDE SEAT WARMER UNIT (SEAT CUSHION SIDE)
DRIVER-SIDE SEAT WARMER UNIT (SEAT BACK SIDE)
G17
G17
PASSENGER-SIDE SEAT WARMER UNIT (SEAT CUSHION SIDE)
PASSENGER-SIDE SEAT WARMER UNIT (SEAT BACK SIDE)

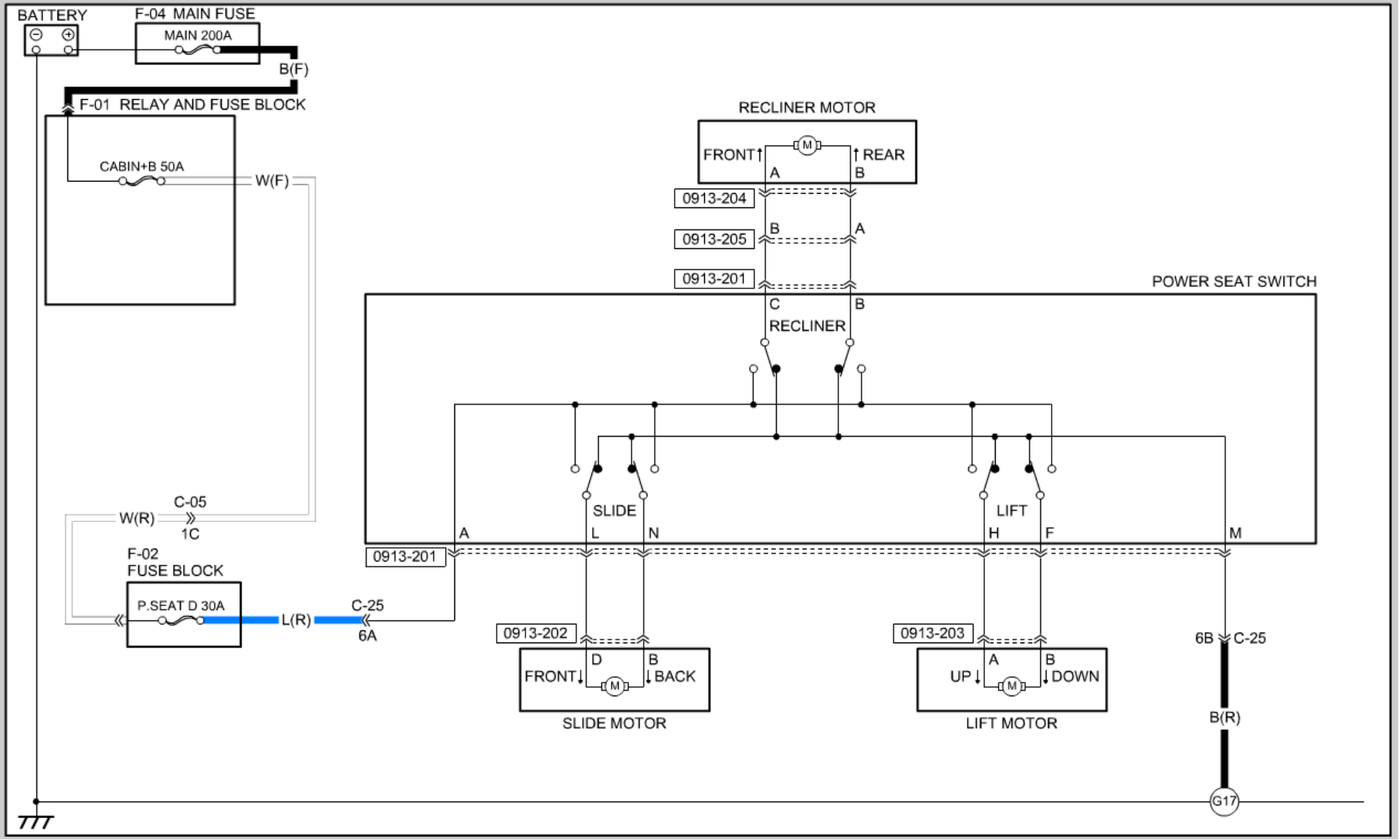
BATTERY
F-04 MAIN FUSE
MAIN 200A
B(F)
F-01 RELAY AND FUSE BLOCK
CABIN+B 50A
W(F)
RECLINER MOTOR
FRONT
REAR
A
B
0913-204
0913-205
0913-201
POWER SEAT SWITCH
C
RECLINER
SLIDE
LIFT
L
N
H
F
M
W(R)
C-05
1C
F-02
FUSE BLOCK
P.SEAT D 30A
L(R)
C-25
6A
0913-202
0913-203
D
FRONT
BACK
UP
DOWN
SLIDE MOTOR
LIFT MOTOR
6B
B(R)
G17

DOOR LOCK SYSTEM (WITH KEYLESS ENTRY SYSTEM)

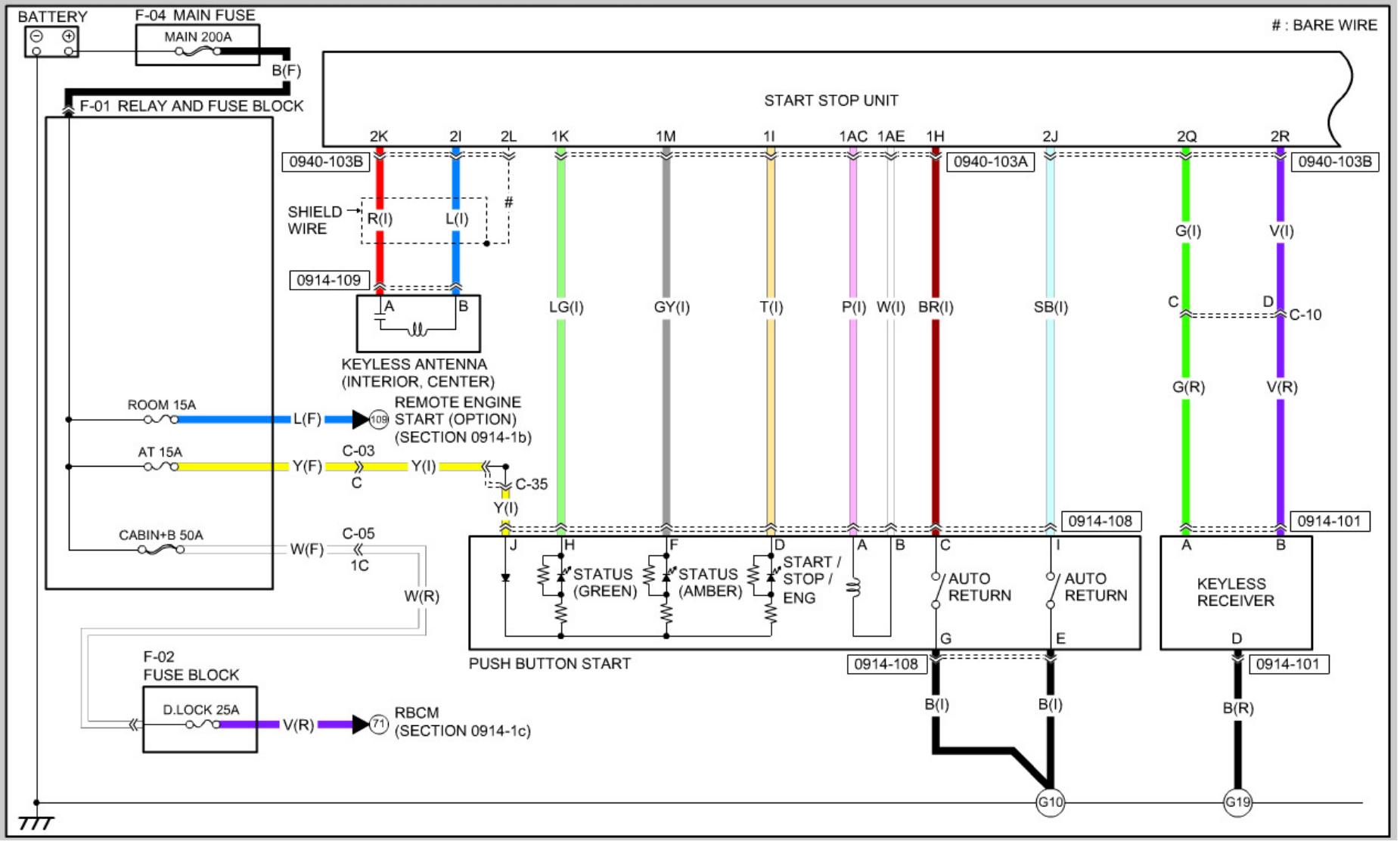

DOOR LOCK SYSTEM (WITH KEYLESS ENTRY SYSTEM)

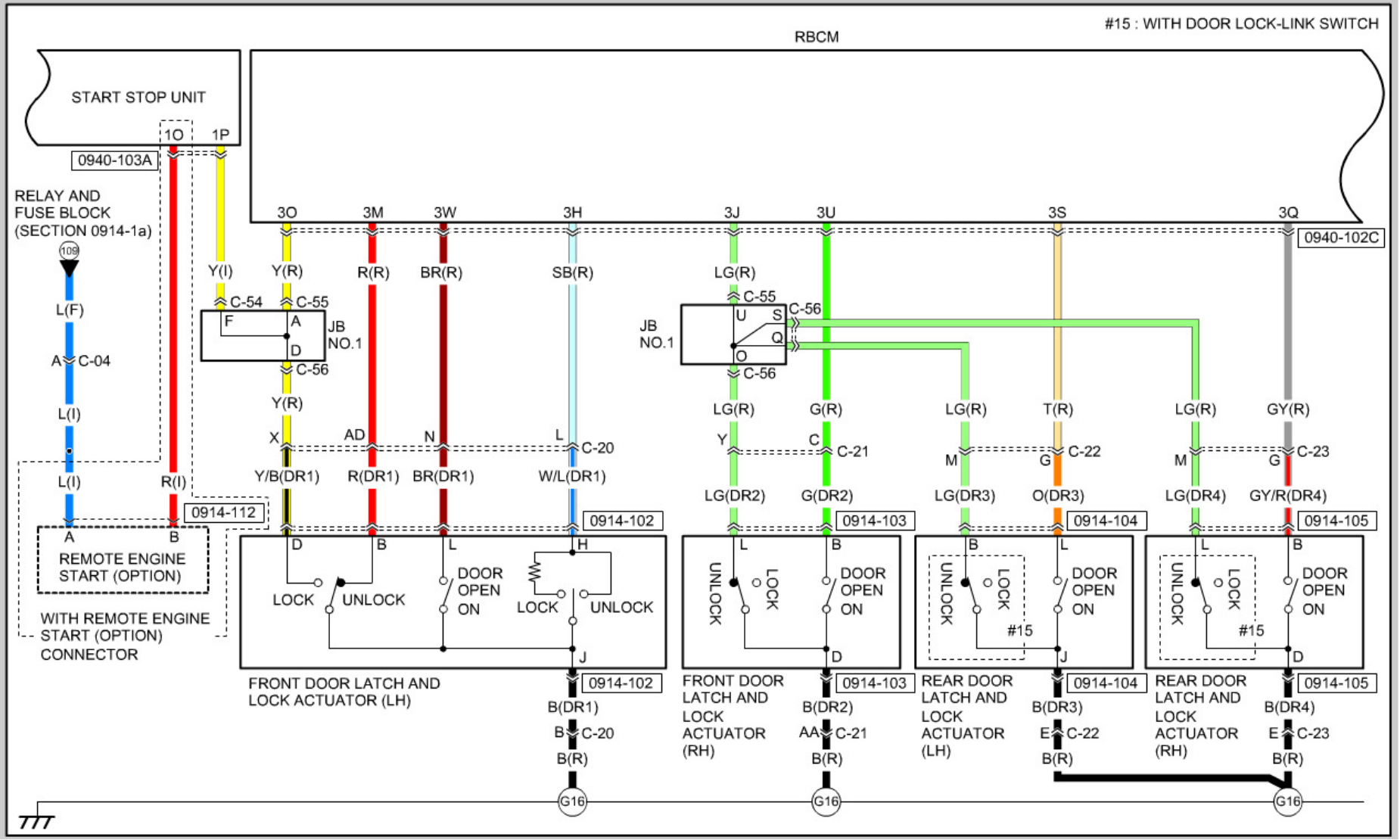

DOOR LOCK SYSTEM (WITH KEYLESS ENTRY SYSTEM)

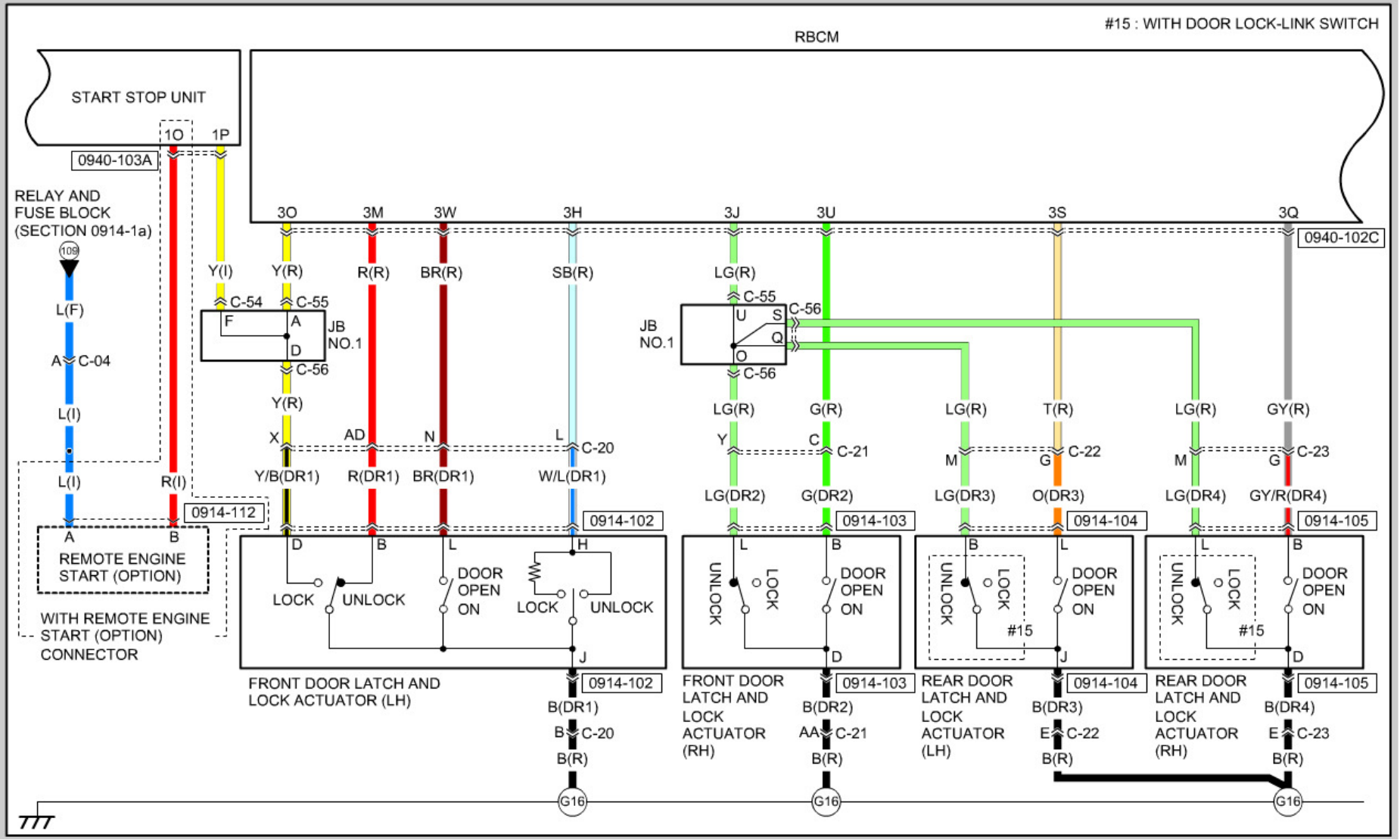

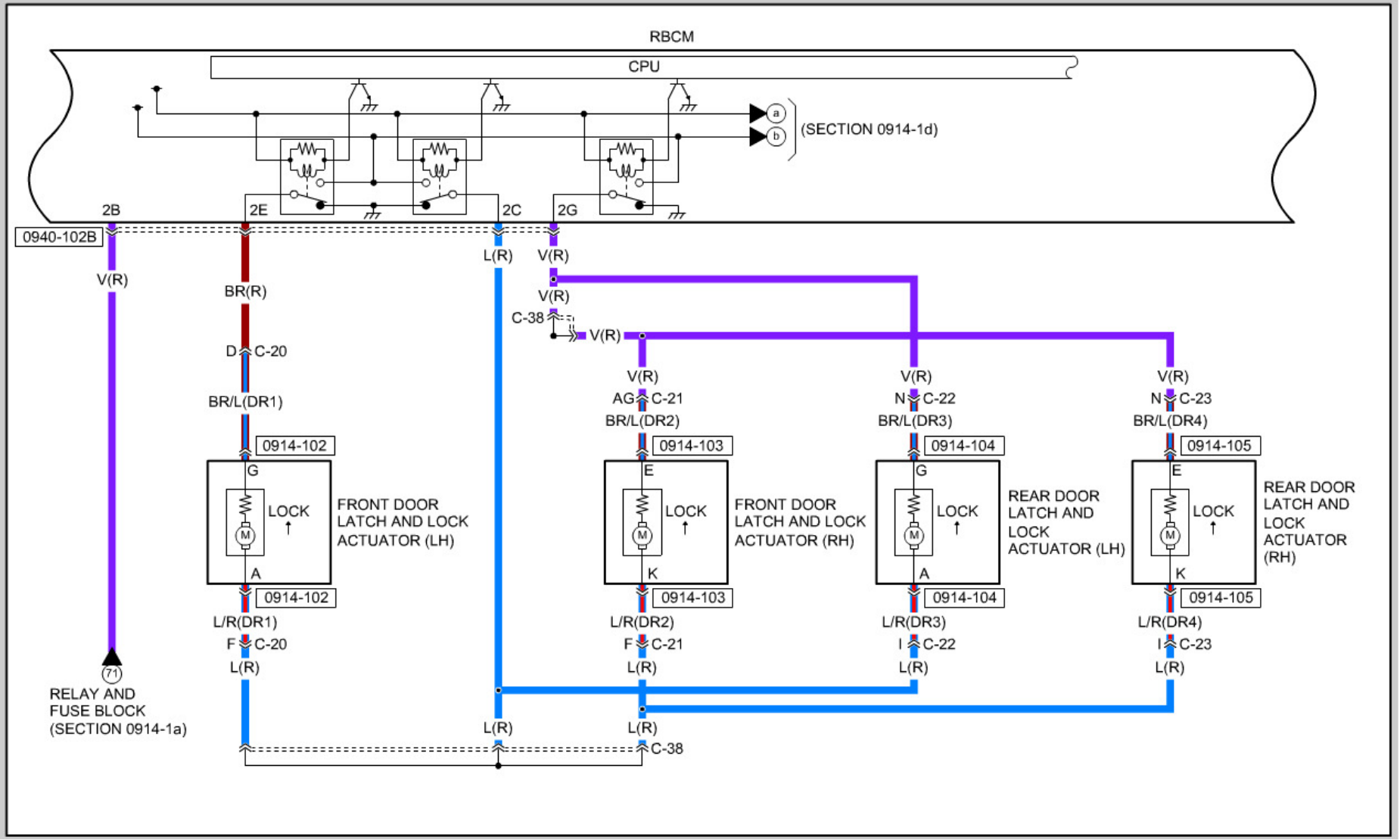
RBCM
CPU
a
b
(SECTION 0914-1d)
2B
2E
2C
2G
0940-102B
V(R)
BR(R)
L(R)
V(R)
V(R)
C-38
V(R)
D
C-20
BR/L(DR1)
0914-102
G
LOCK
M
A
FRONT DOOR LATCH AND LOCK ACTUATOR (LH)
0914-102
L/R(DR1)
F
C-20
L(R)
71
RELAY AND FUSE BLOCK (SECTION 0914-1a)
V(R)
AG
C-21
BR/L(DR2)
0914-103
E
LOCK
M
K
FRONT DOOR LATCH AND LOCK ACTUATOR (RH)
0914-103
L/R(DR2)
F
C-21
L(R)
V(R)
N
C-22
BR/L(DR3)
0914-104
G
LOCK
M
A
REAR DOOR LATCH AND LOCK ACTUATOR (LH)
0914-104
L/R(DR3)
I
C-22
L(R)
V(R)
N
C-23
BR/L(DR4)
0914-105
E
LOCK
M
K
REAR DOOR LATCH AND LOCK ACTUATOR (RH)
0914-105
L/R(DR4)
I
C-23
L(R)
L(R)
L(R)
C-38

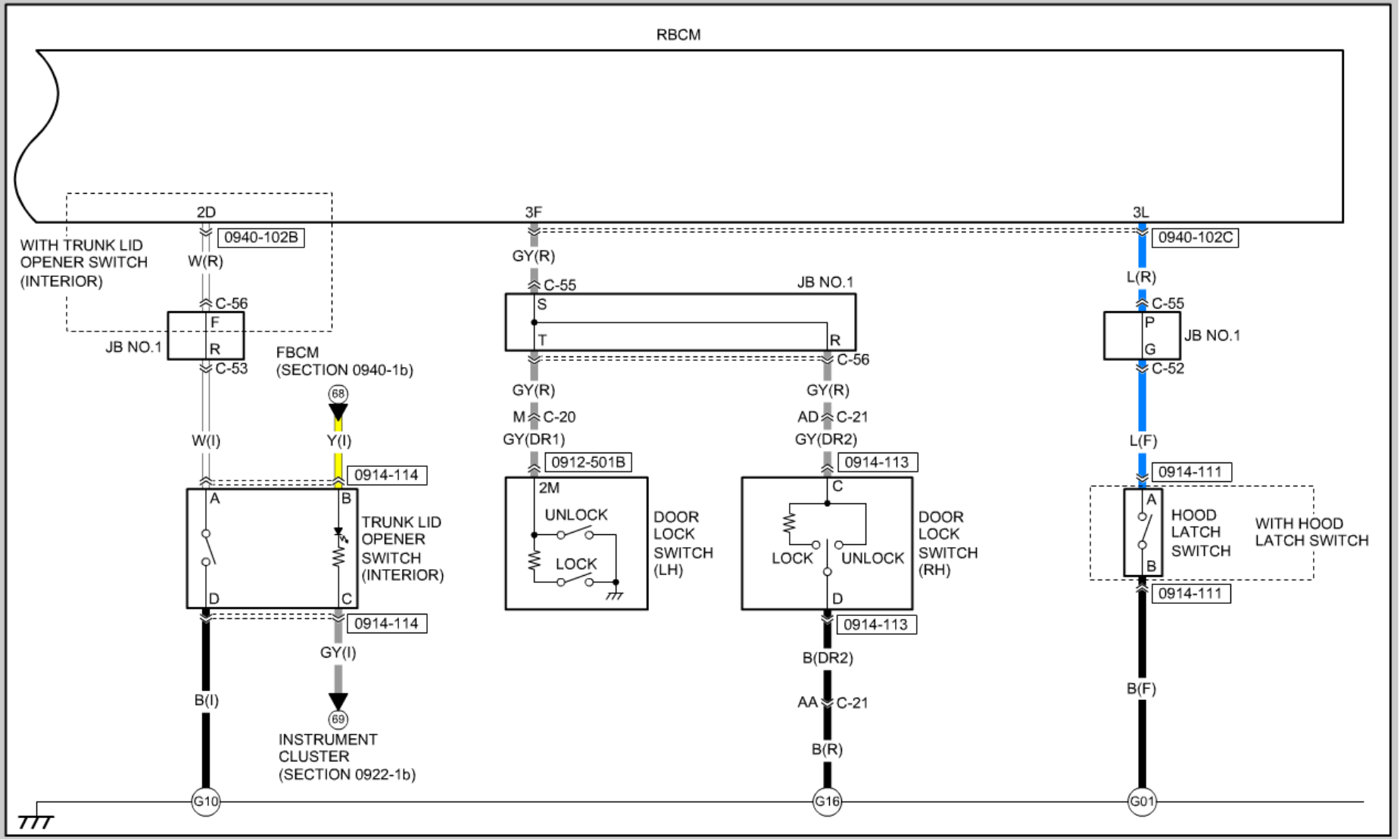
RBCM
2D
0940-102B
WITH TRUNK LID OPENER SWITCH (INTERIOR)
W(R)
C-56
F
JB NO.1
R
C-53
FBCM (SECTION 0940-1b)
68
W(I)
Y(I)
0914-114
A
B
TRUNK LID OPENER SWITCH (INTERIOR)
D
C
0914-114
GY(I)
B(I)
69
INSTRUMENT CLUSTER (SECTION 0922-1b)
G10
3F
GY(R)
C-55
JB NO.1
S
T
R
C-56
GY(R)
M C-20
GY(DR1)
0912-501B
2M
UNLOCK
LOCK
DOOR LOCK SWITCH (LH)
GY(R)
AD C-21
GY(DR2)
0914-113
C
LOCK
UNLOCK
DOOR LOCK SWITCH (RH)
D
0914-113
B(DR2)
AA C-21
B(R)
G16
3L
0940-102C
L(R)
C-55
P
G
JB NO.1
C-52
L(F)
0914-111
A
HOOD LATCH SWITCH
WITH HOOD LATCH SWITCH
B
0914-111
B(F)
G01

DOOR LOCK SYSTEM (WITH ADVANCED KEYLESS ENTRY SYSTEM)

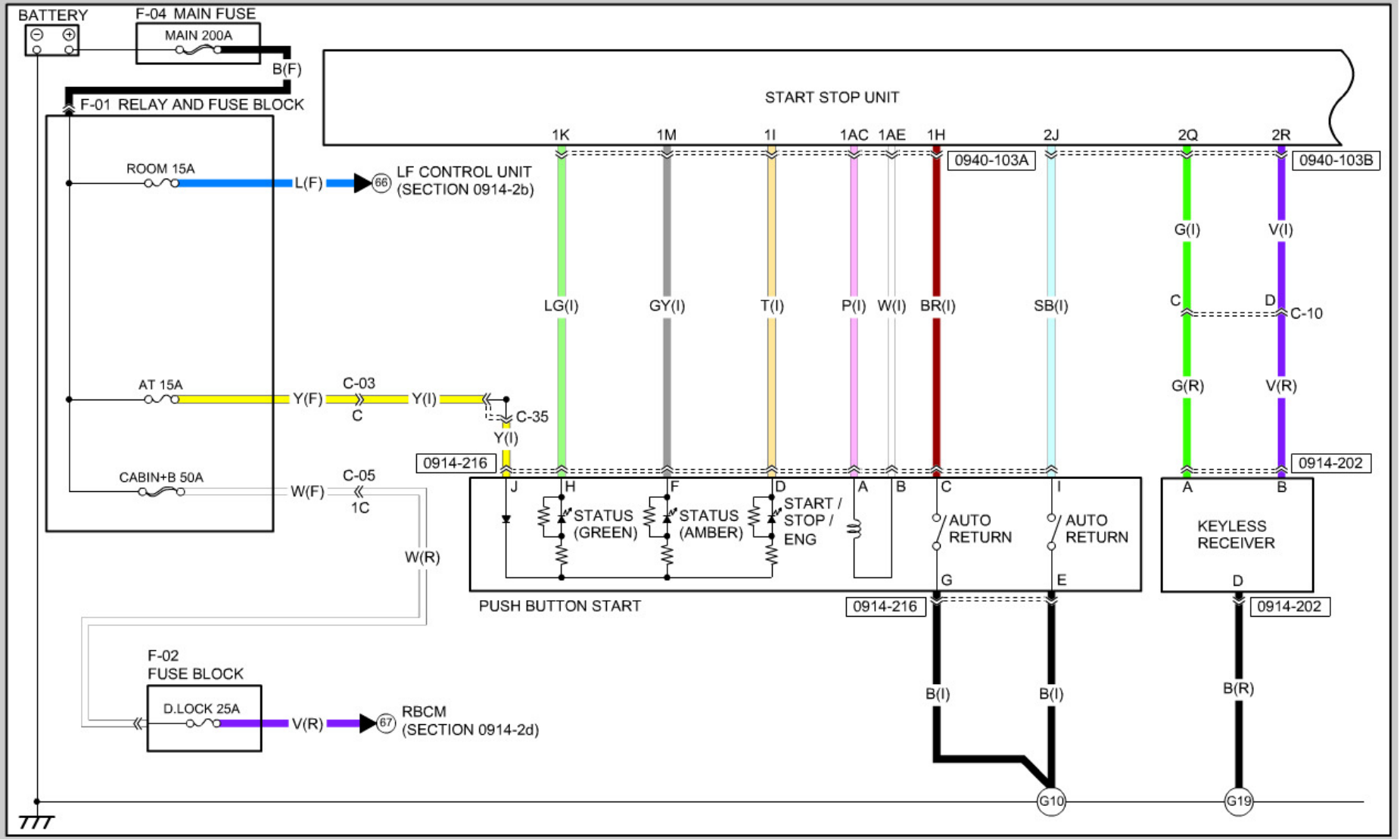

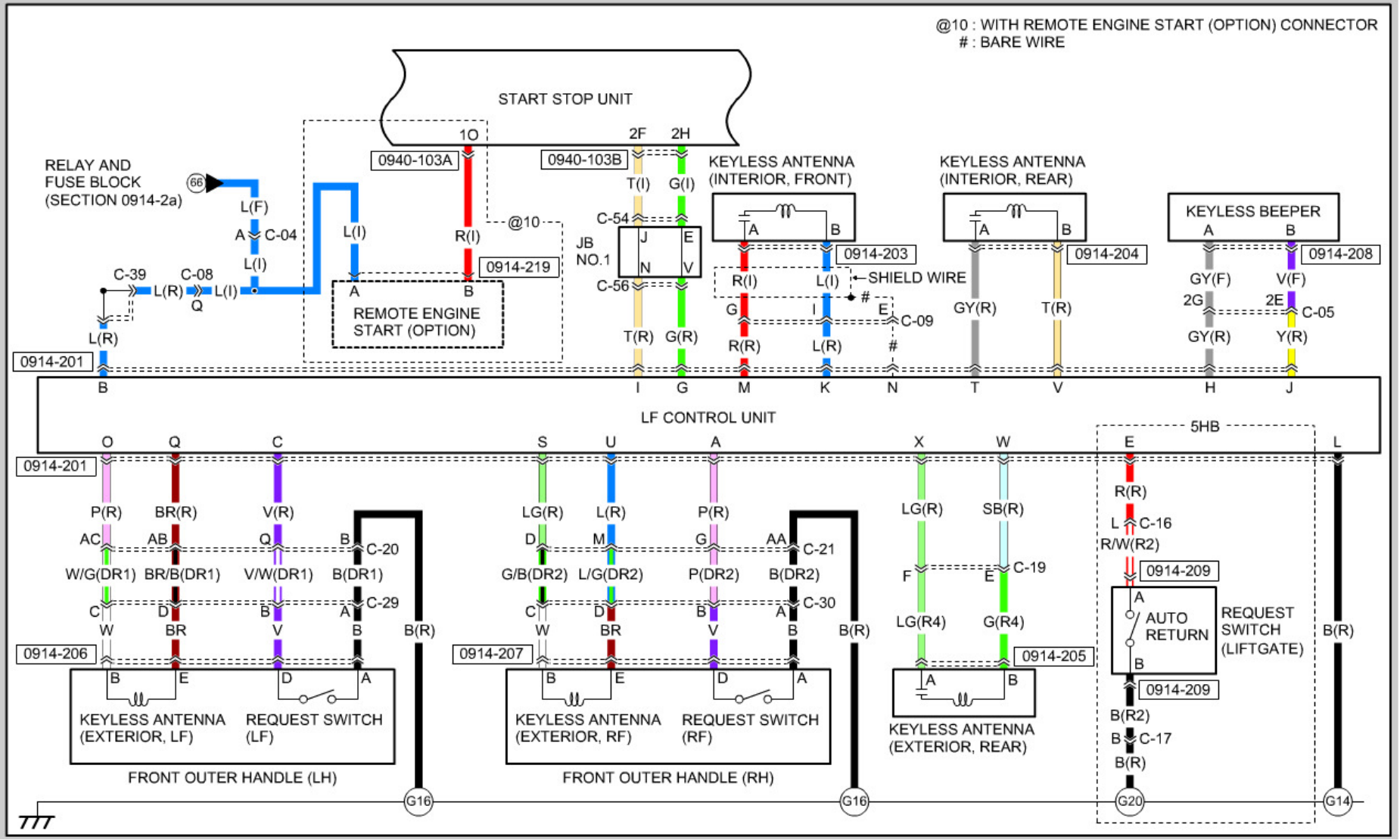
@10 : WITH REMOTE ENGINE START (OPTION) CONNECTOR
: BARE WIRE
START STOP UNIT
RELAY AND FUSE BLOCK (SECTION 0914-2a)
66
L(F)
A C-04
L(I)
C-39
C-08
L(R)
L(I)
Q
L(R)
0914-201
L(I)
0940-103A
1O
R(I)
@10
0914-219
A
B
REMOTE ENGINE START (OPTION)
0940-103B
2F
2H
T(I)
G(I)
C-54
JB NO.1
J
E
N
V
C-56
T(R)
G(R)
KEYLESS ANTENNA (INTERIOR, FRONT)
A
B
0914-203
R(I)
L(I)
SHIELD WIRE
#
G
I
E
C-09
R(R)
L(R)
#
KEYLESS ANTENNA (INTERIOR, REAR)
A
B
0914-204
GY(R)
T(R)
KEYLESS BEEPER
A
B
0914-208
GY(F)
V(F)
2G
2E
C-05
GY(R)
Y(R)
B
I
G
M
K
N
T
V
H
J
LF CONTROL UNIT
5HB
O
Q
C
S
U
A
X
W
E
L
0914-201
P(R)
BR(R)
V(R)
AC
AB
Q
B
C-20
W/G(DR1)
BR/B(DR1)
V/W(DR1)
B(DR1)
C
D
B
A
C-29
W
BR
V
B
B(R)
0914-206
B
E
D
A
KEYLESS ANTENNA (EXTERIOR, LF)
REQUEST SWITCH (LF)
FRONT OUTER HANDLE (LH)
LG(R)
L(R)
P(R)
D
M
G
AA
C-21
G/B(DR2)
L/G(DR2)
P(DR2)
B(DR2)
C
D
B
A
C-30
W
BR
V
B
B(R)
0914-207
B
E
D
A
KEYLESS ANTENNA (EXTERIOR, RF)
REQUEST SWITCH (RF)
FRONT OUTER HANDLE (RH)
LG(R)
SB(R)
F
E
C-19
LG(R4)
G(R4)
0914-205
A
B
KEYLESS ANTENNA (EXTERIOR, REAR)
R(R)
L
C-16
R/W(R2)
0914-209
A
AUTO RETURN
B
REQUEST SWITCH (LIFTGATE)
0914-209
B(R2)
B
C-17
B(R)
B(R)
G16
G16
G20
G14

DOOR LOCK SYSTEM (WITH ADVANCED KEYLESS ENTRY SYSTEM)

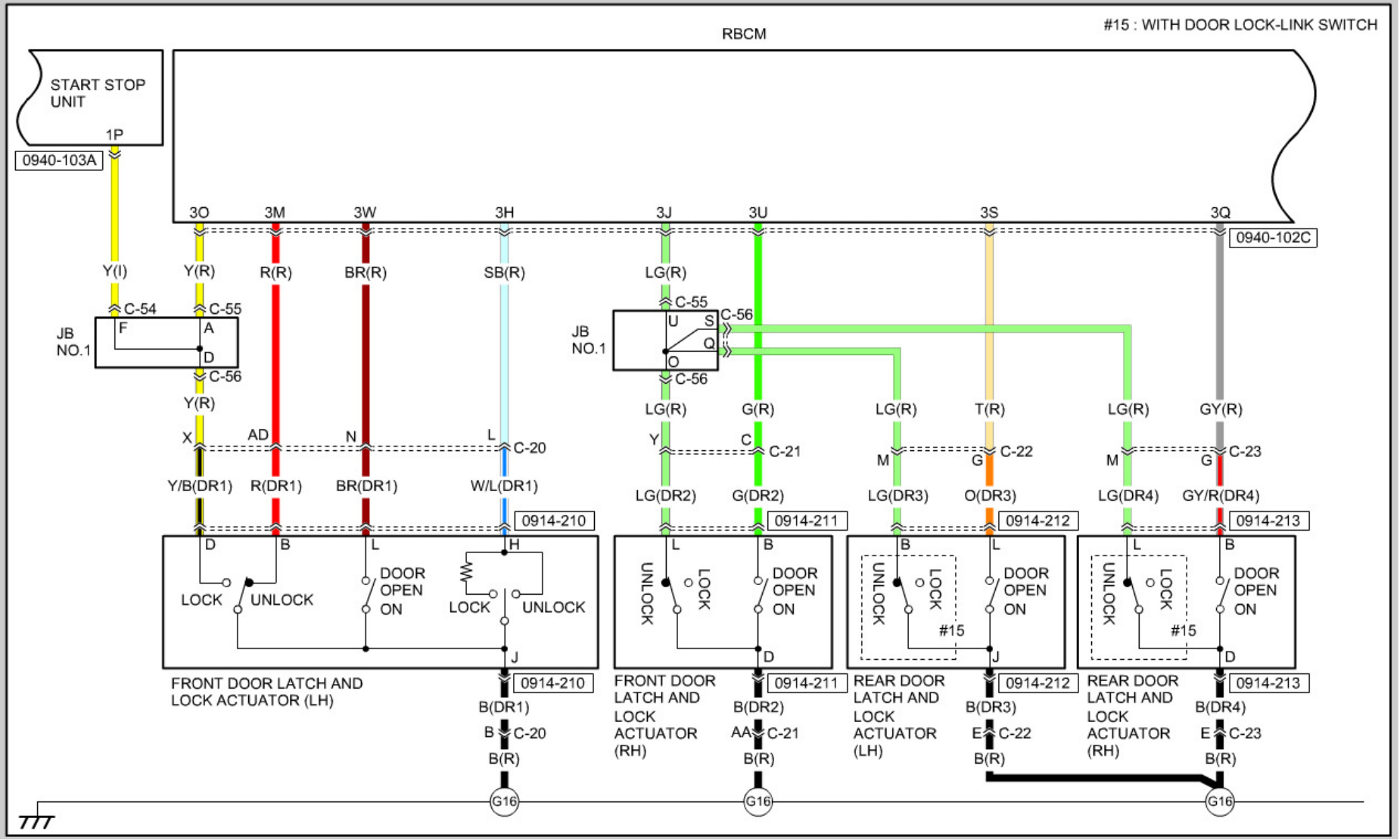

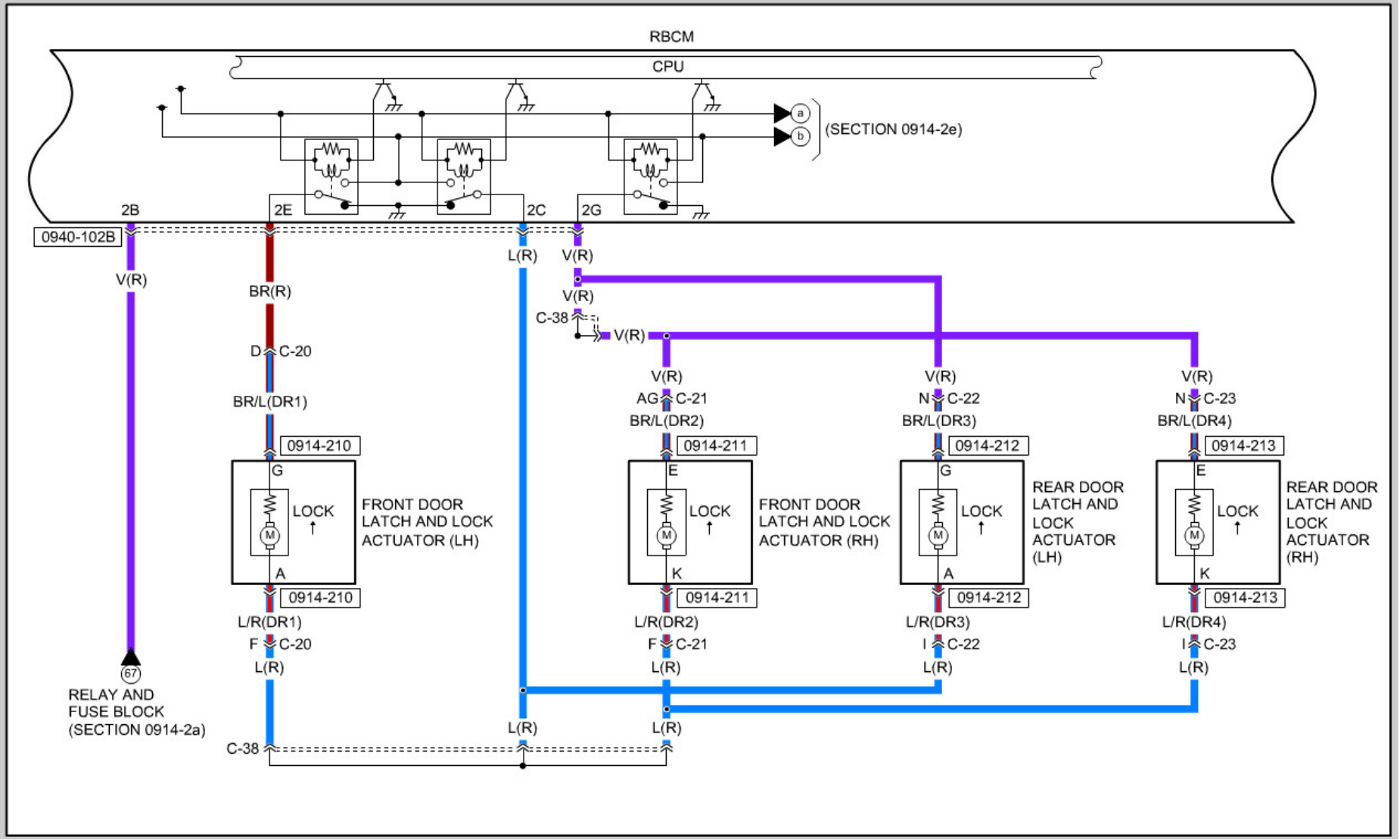
RBCM
CPU
a
b
(SECTION 0914-2e)
2B
2E
2C
2G
0940-102B
V(R)
BR(R)
L(R)
V(R)
V(R)
C-38
V(R)
D
C-20
BR/L(DR1)
0914-210
G
LOCK
M
A
FRONT DOOR LATCH AND LOCK ACTUATOR (LH)
0914-210
L/R(DR1)
F
C-20
L(R)
67
RELAY AND FUSE BLOCK (SECTION 0914-2a)
C-38
L(R)
L(R)
V(R)
AG
C-21
BR/L(DR2)
0914-211
E
LOCK
M
K
FRONT DOOR LATCH AND LOCK ACTUATOR (RH)
0914-211
L/R(DR2)
F
C-21
L(R)
V(R)
N
C-22
BR/L(DR3)
0914-212
G
LOCK
M
A
REAR DOOR LATCH AND LOCK ACTUATOR (LH)
0914-212
L/R(DR3)
I
C-22
L(R)
V(R)
N
C-23
BR/L(DR4)
0914-213
E
LOCK
M
K
REAR DOOR LATCH AND LOCK ACTUATOR (RH)
0914-213
L/R(DR4)
I
C-23
L(R)

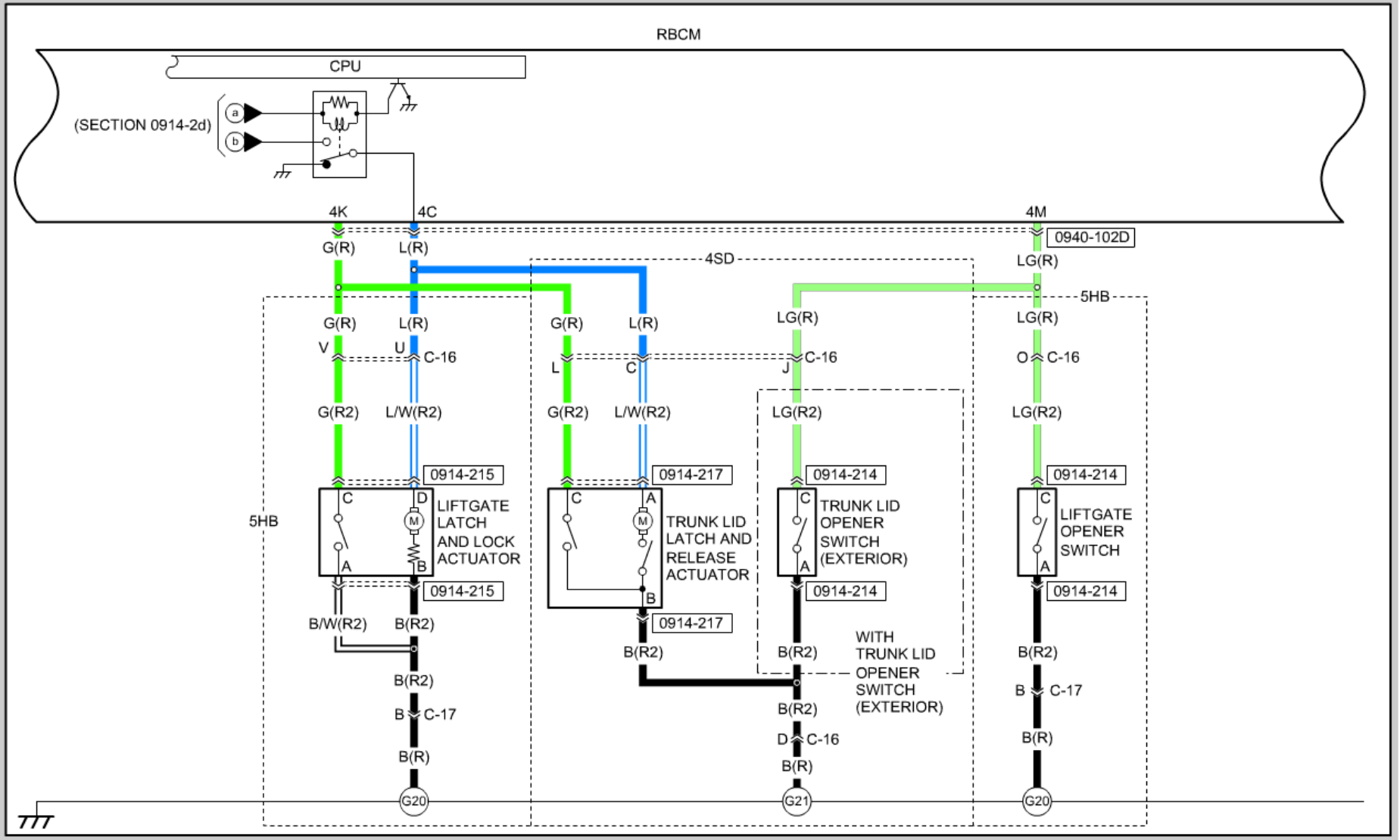
RBCM
CPU
(SECTION 0914-2d)
a
b
4K
4C
4M
0940-102D
G(R)
L(R)
LG(R)
4SD
5HB
V
U
C-16
L
C
J
O
G(R2)
L/W(R2)
LG(R2)
0914-215
0914-217
0914-214
C
D
A
B
M
LIFTGATE LATCH AND LOCK ACTUATOR
TRUNK LID LATCH AND RELEASE ACTUATOR
TRUNK LID OPENER SWITCH (EXTERIOR)
LIFTGATE OPENER SWITCH
B/W(R2)
B(R2)
B
C-17
B(R)
WITH TRUNK LID OPENER SWITCH (EXTERIOR)
D
G20
G21

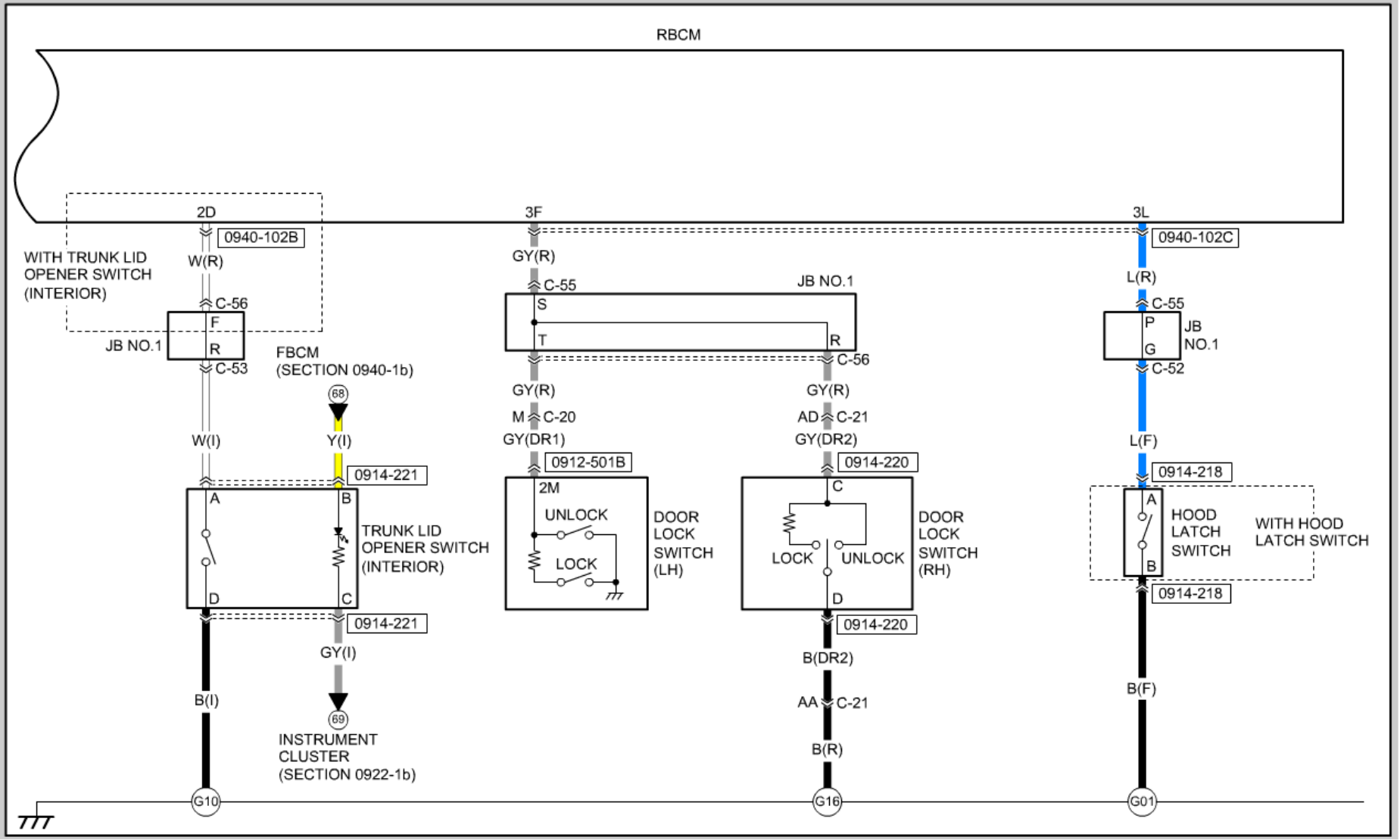
RBCM
2D
0940-102B
WITH TRUNK LID OPENER SWITCH (INTERIOR)
W(R)
C-56
F
JB NO.1
R
C-53
FBCM (SECTION 0940-1b)
68
W(I)
Y(I)
0914-221
A
B
TRUNK LID OPENER SWITCH (INTERIOR)
D
C
0914-221
GY(I)
B(I)
69
INSTRUMENT CLUSTER (SECTION 0922-1b)
G10
3F
GY(R)
C-55
JB NO.1
S
T
R
C-56
GY(R)
M C-20
GY(DR1)
0912-501B
2M
UNLOCK
LOCK
DOOR LOCK SWITCH (LH)
GY(R)
AD C-21
GY(DR2)
0914-220
C
LOCK
UNLOCK
DOOR LOCK SWITCH (RH)
D
0914-220
B(DR2)
AA C-21
B(R)
G16
3L
0940-102C
L(R)
C-55
P
G
JB NO.1
C-52
L(F)
0914-218
A
B
HOOD LATCH SWITCH
WITH HOOD LATCH SWITCH
0914-218
B(F)
G01

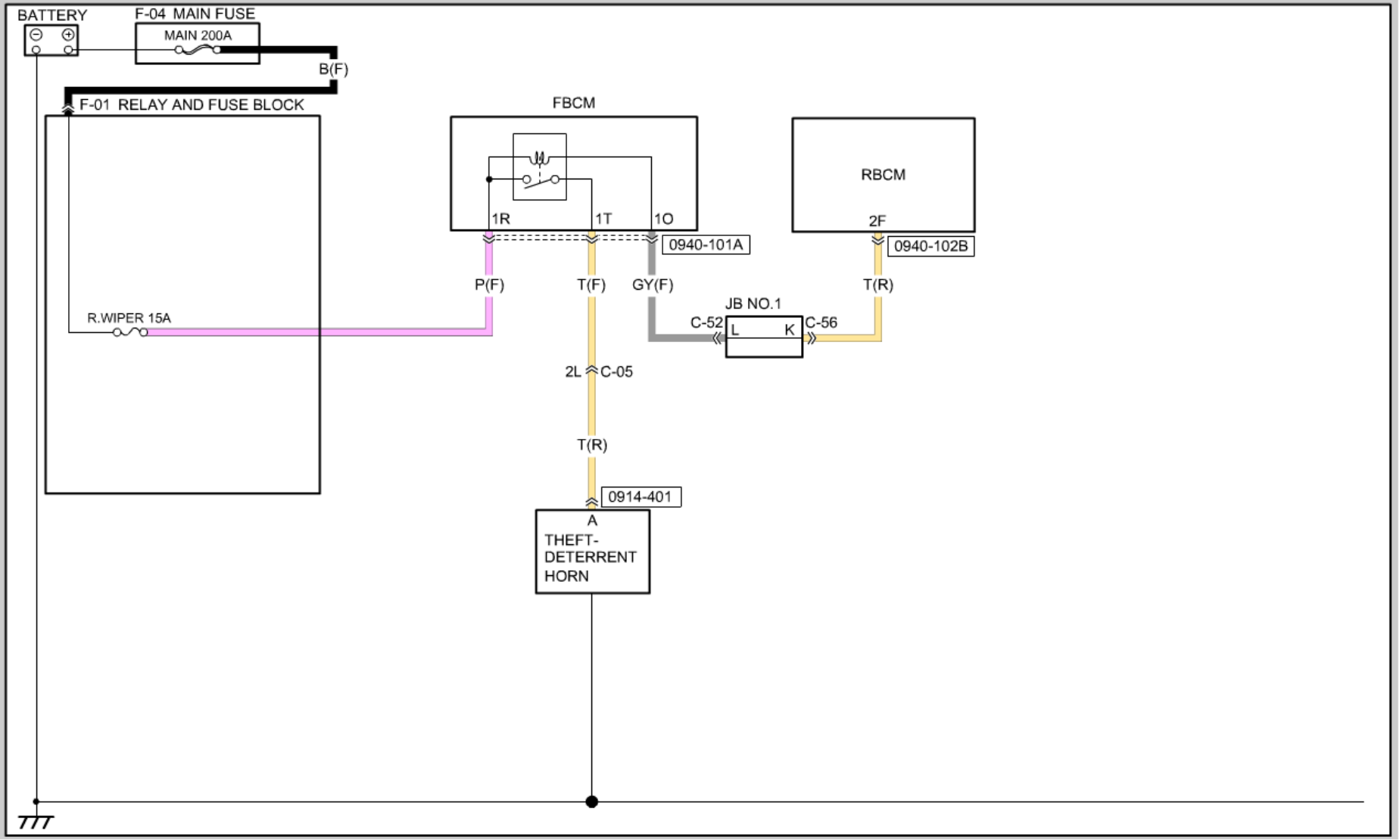
BATTERY
F-04 MAIN FUSE
MAIN 200A
B(F)
F-01 RELAY AND FUSE BLOCK
R.WIPER 15A
FBCM
1R
1T
1O
0940-101A
P(F)
T(F)
GY(F)
RBCM
2F
0940-102B
T(R)
JB NO.1
C-52
L
K
C-56
2L
C-05
T(R)
0914-401
A
THEFT-
DETERRENT
HORN

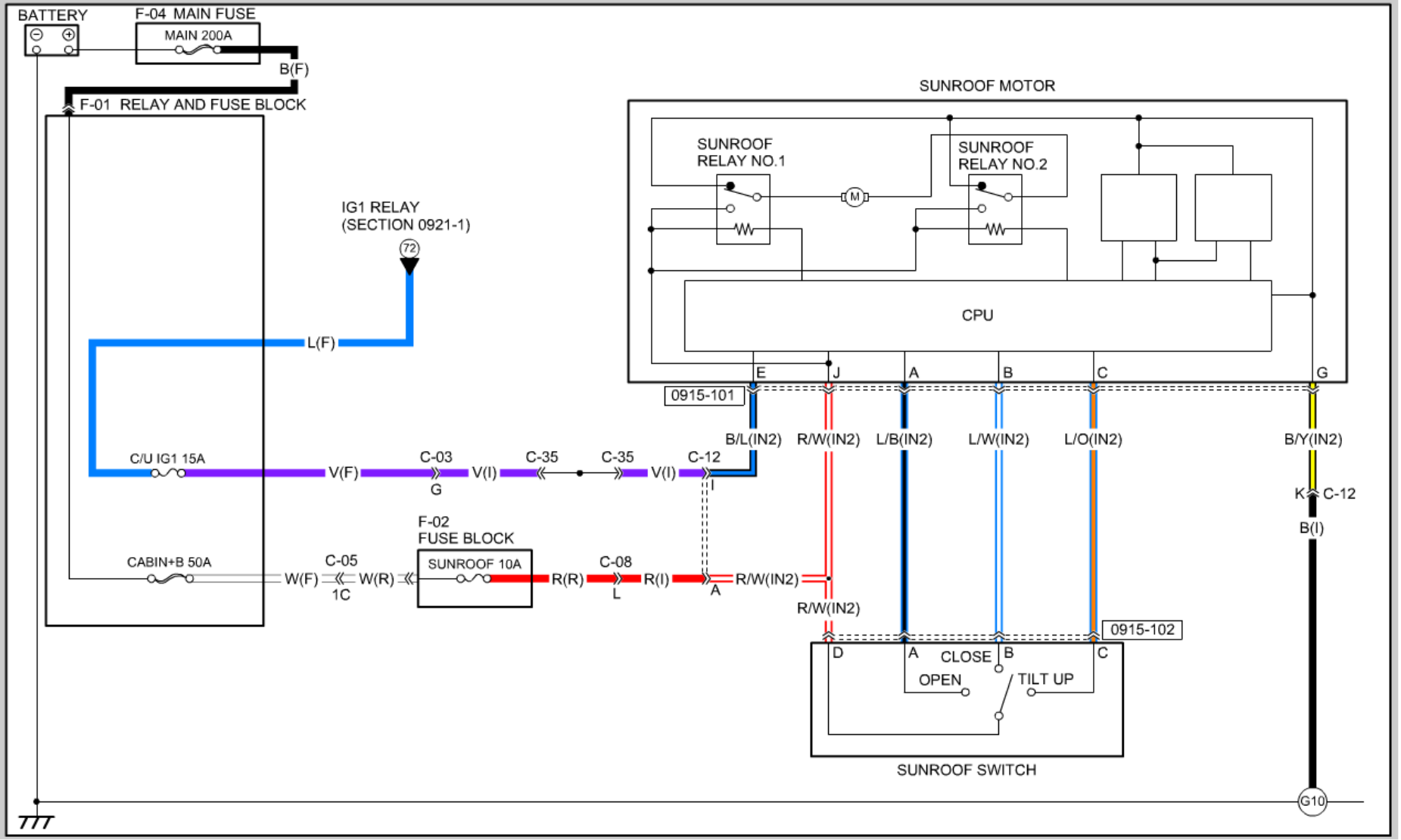
BATTERY
F-04 MAIN FUSE
MAIN 200A
B(F)
F-01 RELAY AND FUSE BLOCK
IG1 RELAY
(SECTION 0921-1)
72
L(F)
C/U IG1 15A
V(F)
C-03
G
V(I)
C-35
C-35
V(I)
C-12
I
CABIN+B 50A
W(F)
C-05
1C
W(R)
F-02
FUSE BLOCK
SUNROOF 10A
R(R)
C-08
L
R(I)
A
R/W(IN2)
R/W(IN2)
SUNROOF MOTOR
SUNROOF
RELAY NO.1
SUNROOF
RELAY NO.2
M
CPU
E
J
A
B
C
G
0915-101
B/L(IN2)
R/W(IN2)
L/B(IN2)
L/W(IN2)
L/O(IN2)
B/Y(IN2)
K
C-12
B(I)
0915-102
D
A
CLOSE
B
C
OPEN
TILT UP
SUNROOF SWITCH
G10

HEADLIGHT (WITHOUT DISCHARGE HEADLIGHT SYSTEM)

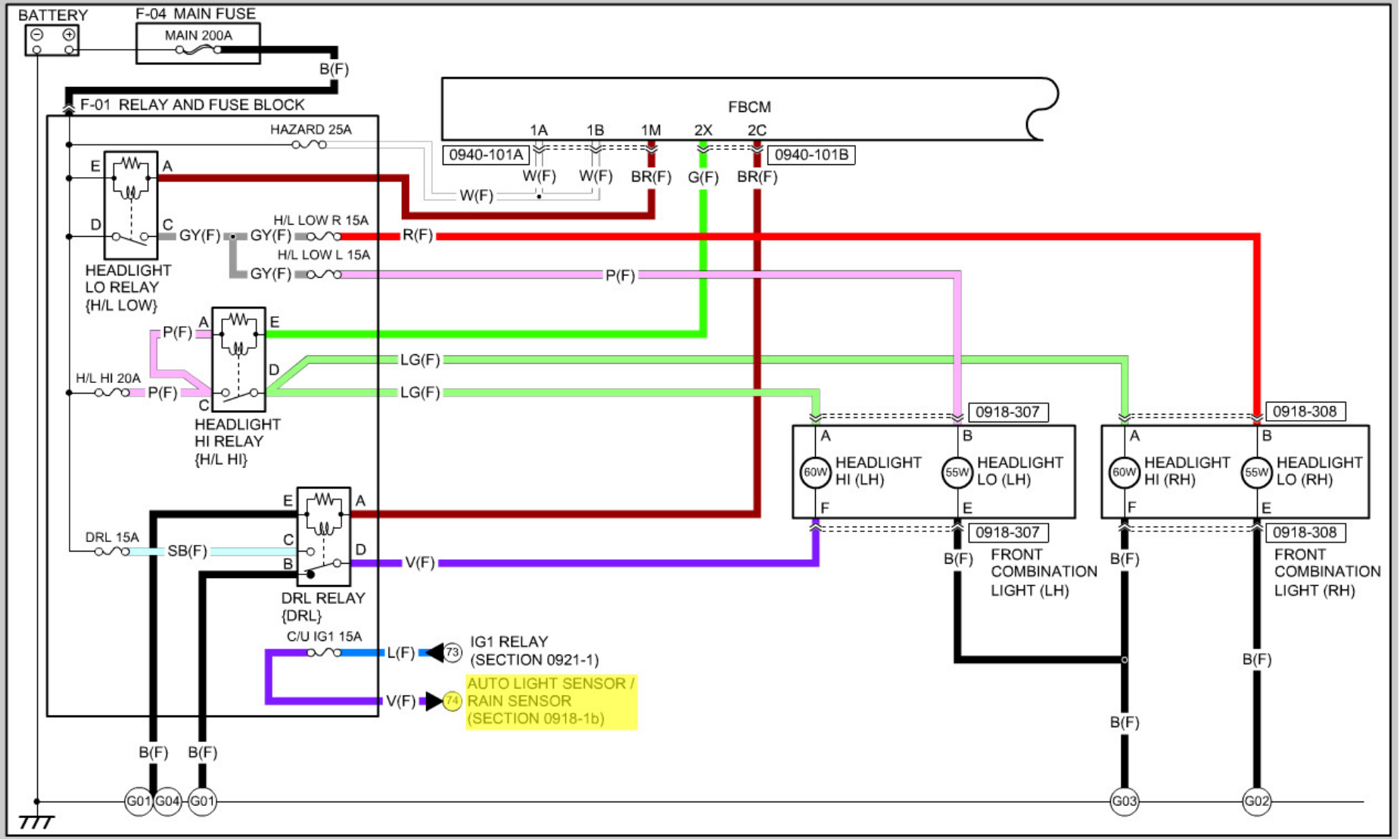

HEADLIGHT (WITHOUT DISCHARGE HEADLIGHT SYSTEM)

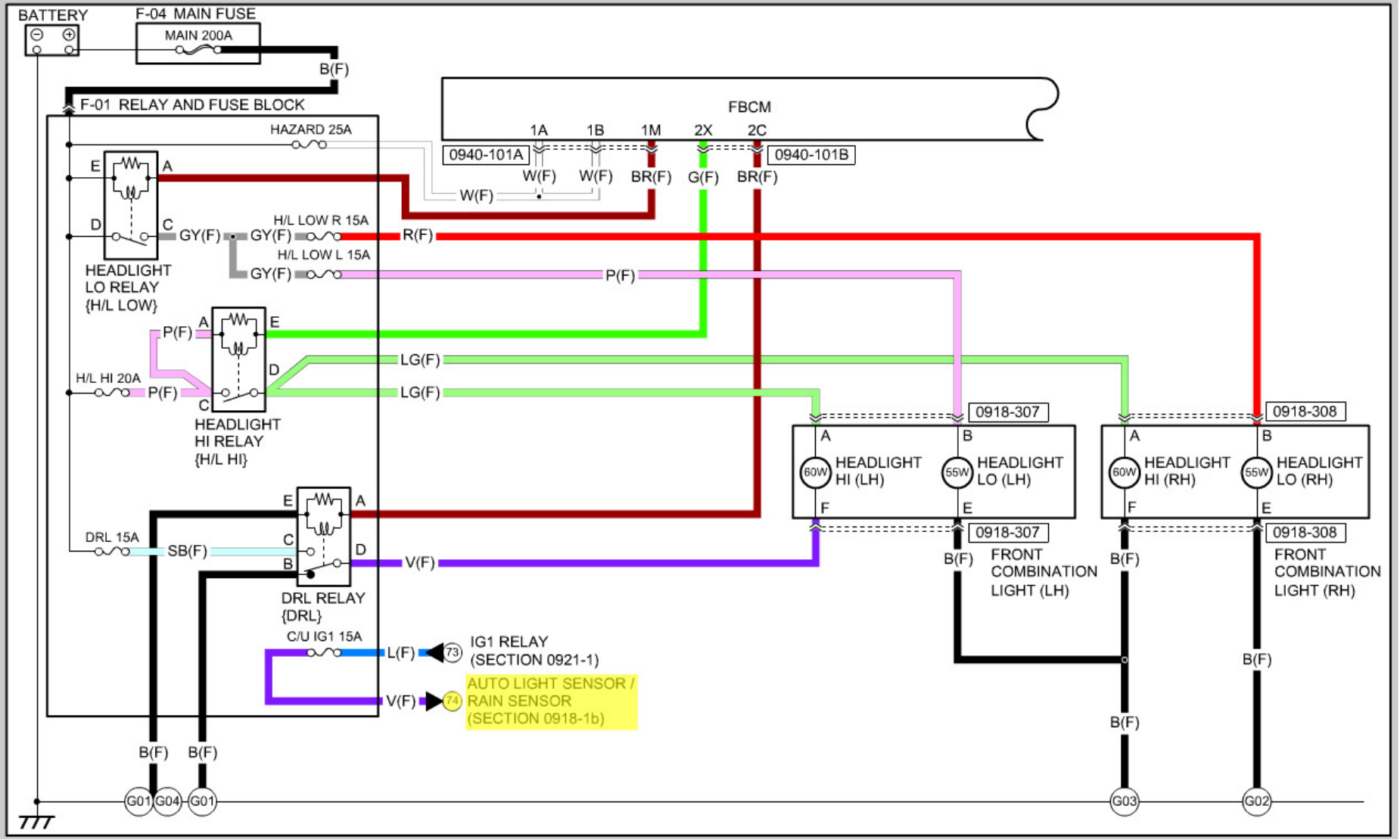

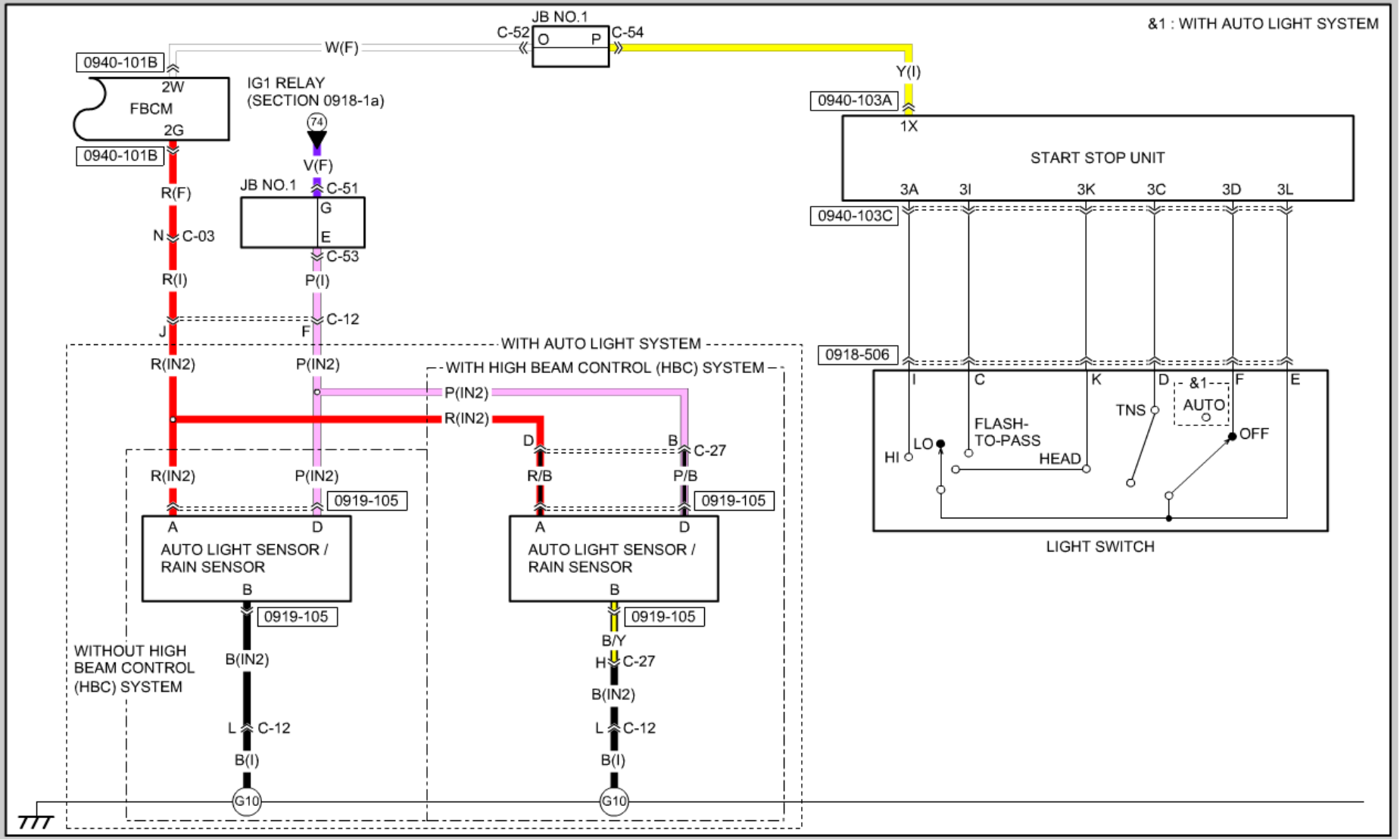
&1 : WITH AUTO LIGHT SYSTEM
JB NO.1
C-52
O
P
C-54
W(F)
0940-101B
2W
FBCM
2G
0940-101B
IG1 RELAY
(SECTION 0918-1a)
74
V(F)
JB NO.1
C-51
G
E
C-53
R(F)
N
C-03
R(I)
P(I)
J
F
C-12
R(IN2)
P(IN2)
WITH AUTO LIGHT SYSTEM
WITH HIGH BEAM CONTROL (HBC) SYSTEM
P(IN2)
R(IN2)
D
B
C-27
R/B
P/B
R(IN2)
P(IN2)
0919-105
0919-105
A
D
AUTO LIGHT SENSOR /
RAIN SENSOR
B
0919-105
WITHOUT HIGH
BEAM CONTROL
(HBC) SYSTEM
B(IN2)
L
C-12
B(I)
G10
B/Y
H
C-27
B(IN2)
L
C-12
B(I)
G10
Y(I)
0940-103A
1X
START STOP UNIT
3A
3I
3K
3C
3D
3L
0940-103C
0918-506
I
C
K
D
&1
F
E
AUTO
TNS
FLASH-
TO-PASS
OFF
HI
LO
HEAD
LIGHT SWITCH

HEADLIGHT (WITH DISCHARGE HEADLIGHT SYSTEM)

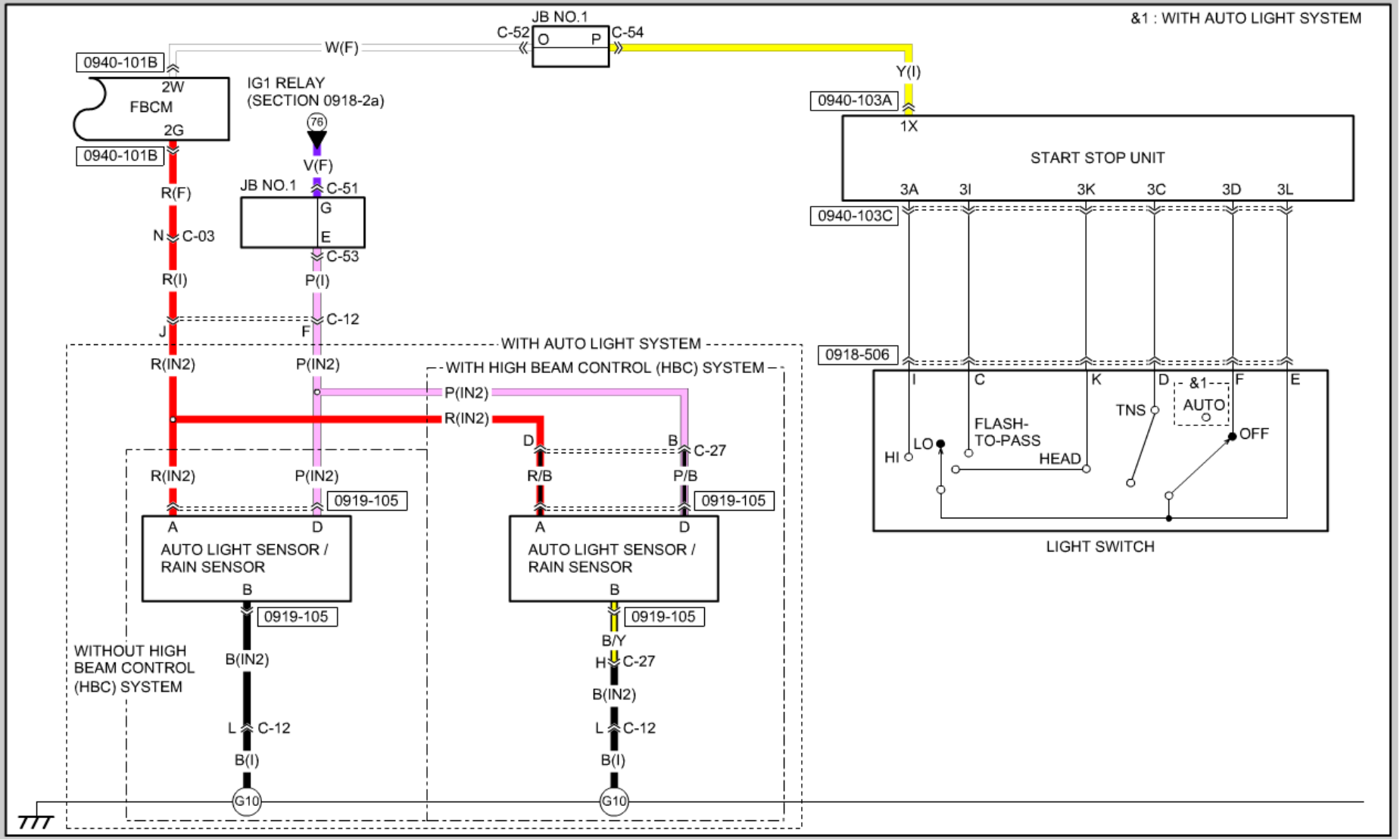

LICENSE PLATE LIGHT / PARKING LIGHT / SIDE MARKER LIGHT / TAILLIGHT

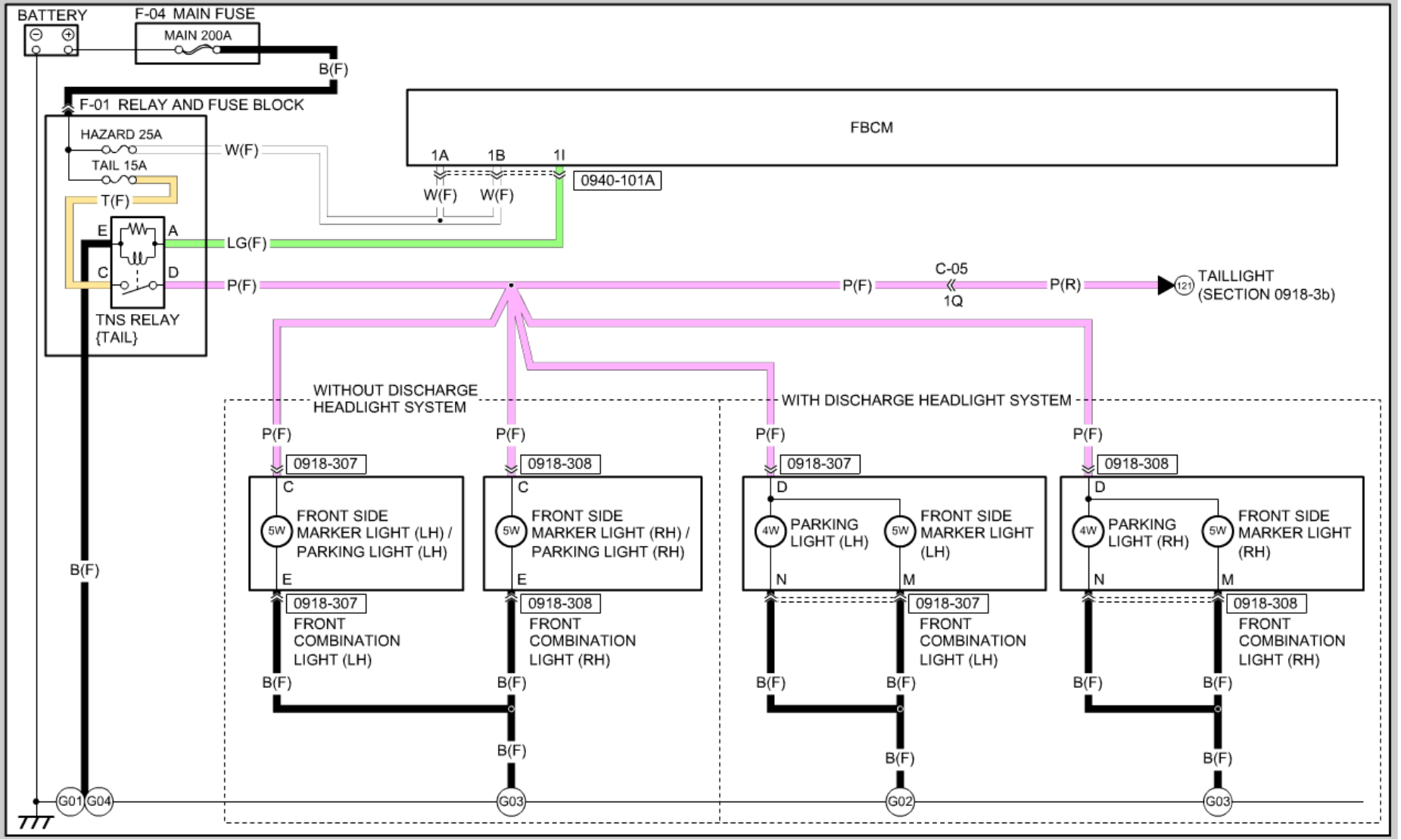

LICENSE PLATE LIGHT / PARKING LIGHT / SIDE MARKER LIGHT / TAILLIGHT

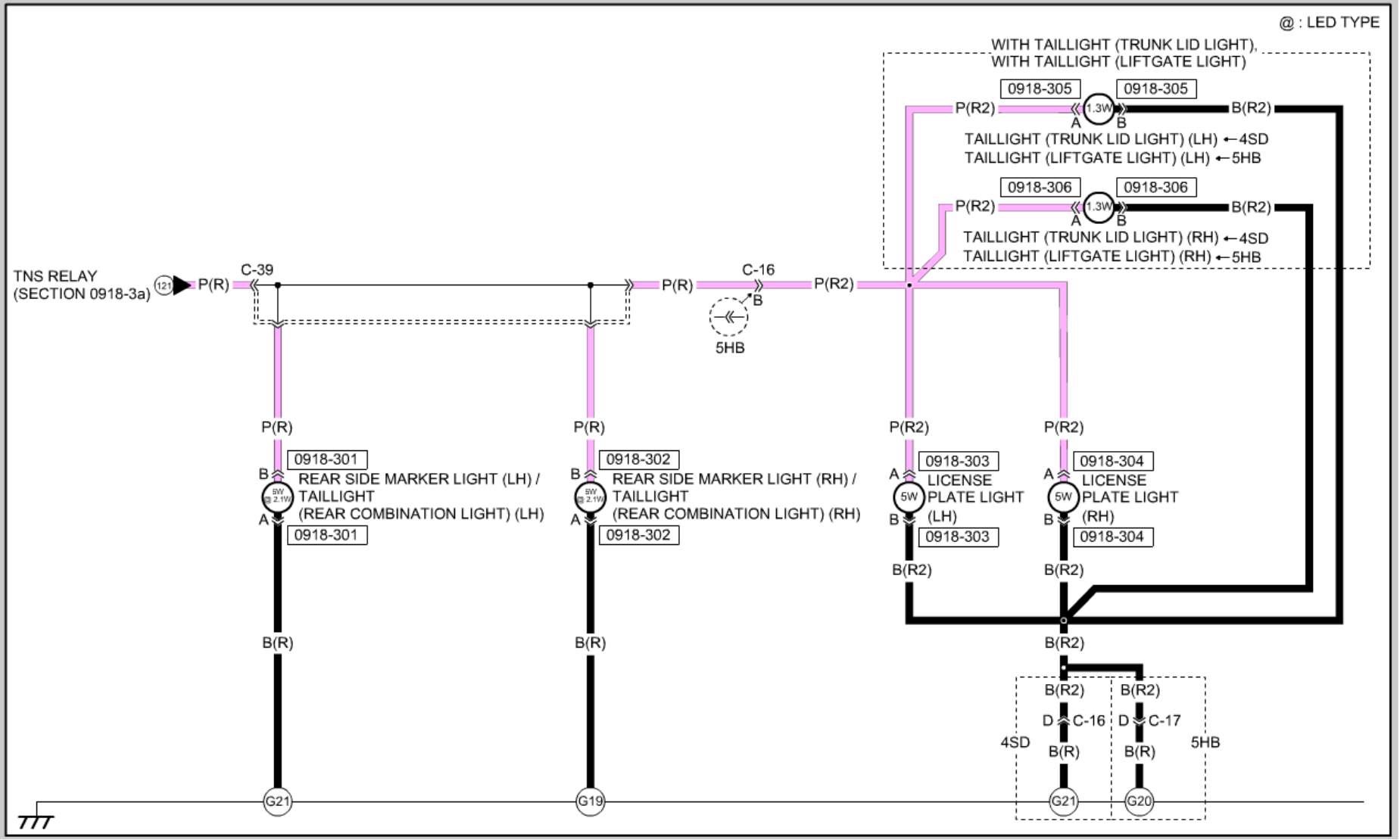

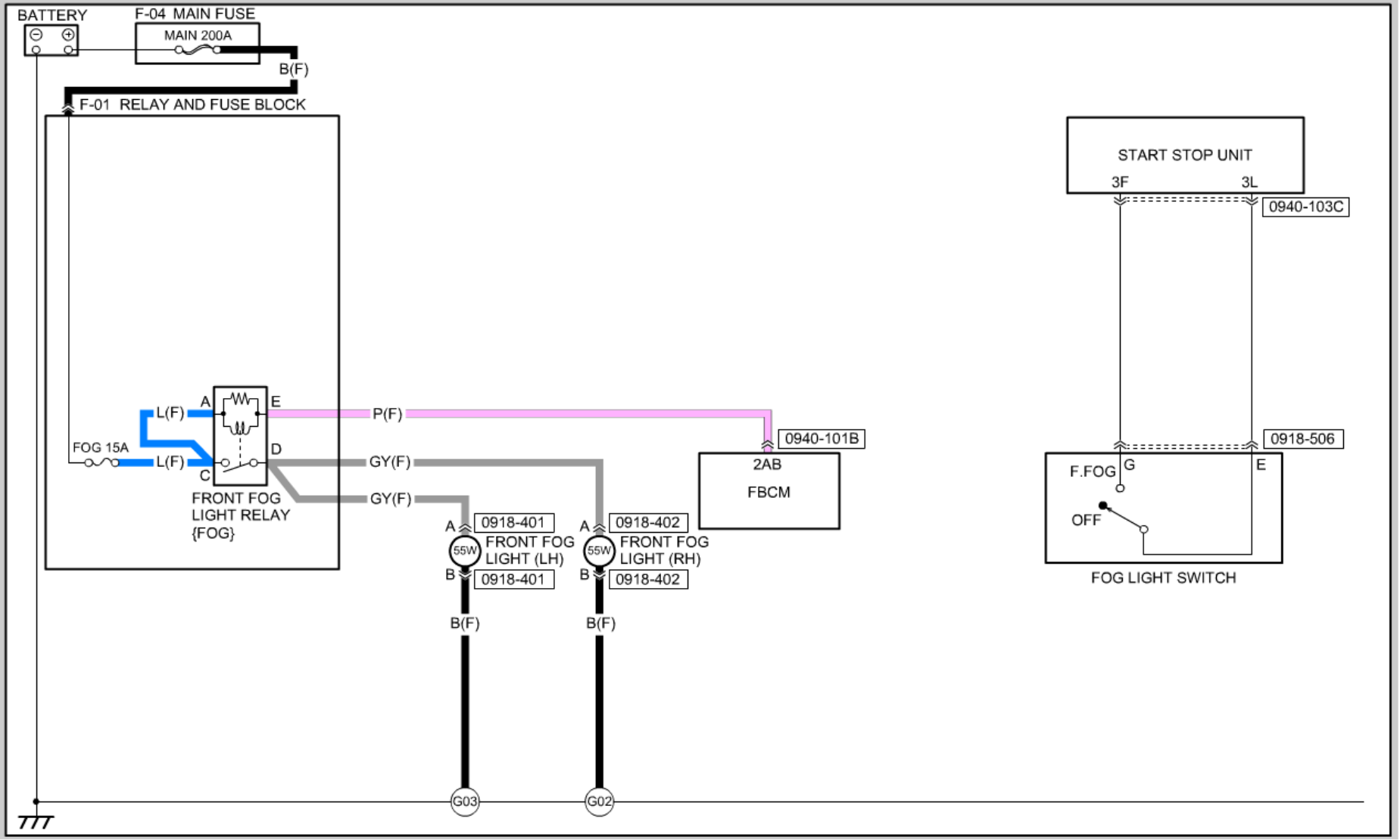
BATTERY
F-04 MAIN FUSE
MAIN 200A
B(F)
F-01 RELAY AND FUSE BLOCK
A
E
L(F)
P(F)
FOG 15A
L(F)
D
GY(F)
C
GY(F)
FRONT FOG
LIGHT RELAY
{FOG}
0940-101B
2AB
FBCM
A
0918-401
55W
FRONT FOG
LIGHT (LH)
B
0918-401
B(F)
A
0918-402
55W
FRONT FOG
LIGHT (RH)
B
0918-402
B(F)
G03
G02
START STOP UNIT
3F
3L
0940-103C
0918-506
F.FOG
G
E
OFF
FOG LIGHT SWITCH

TURN AND HAZARD WARNING LIGHT

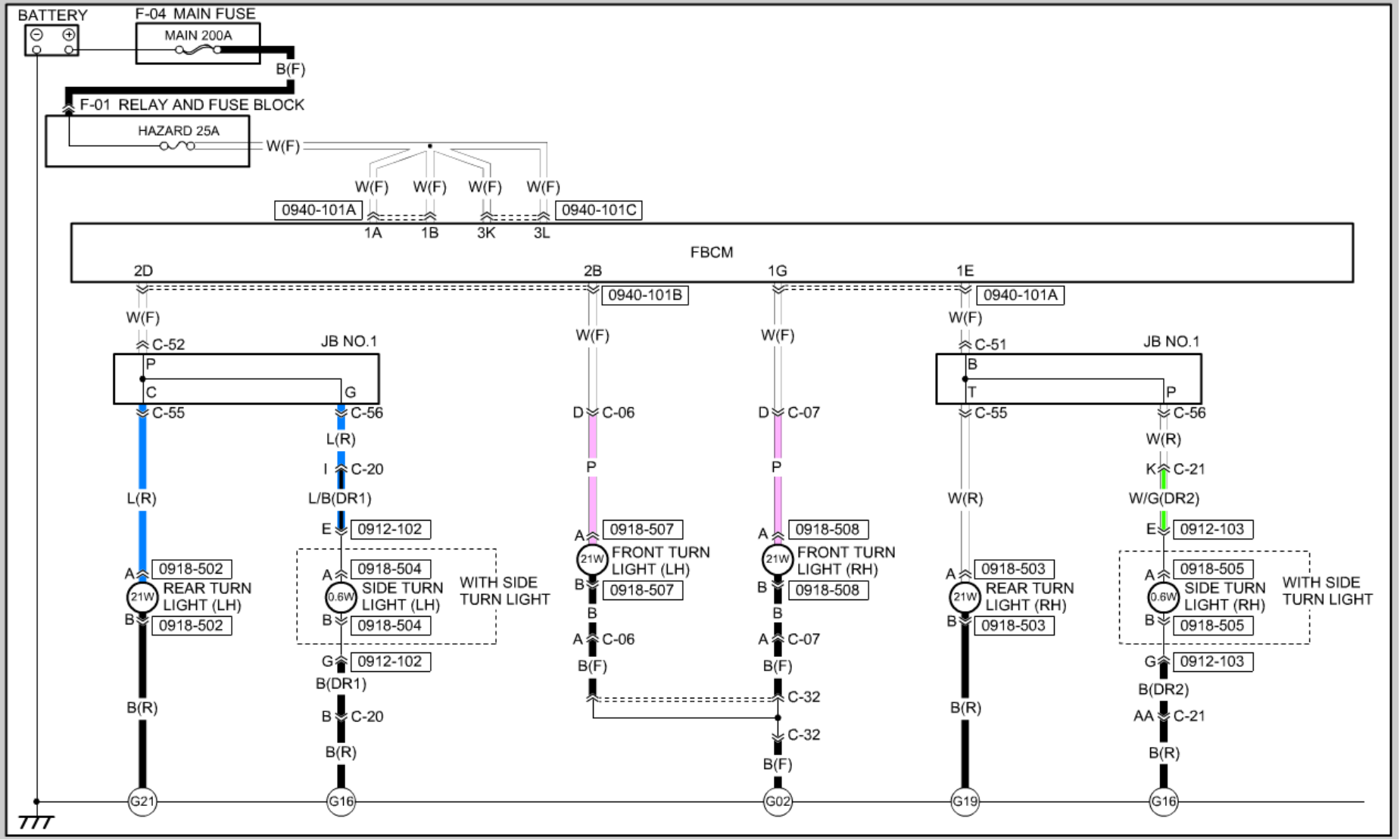

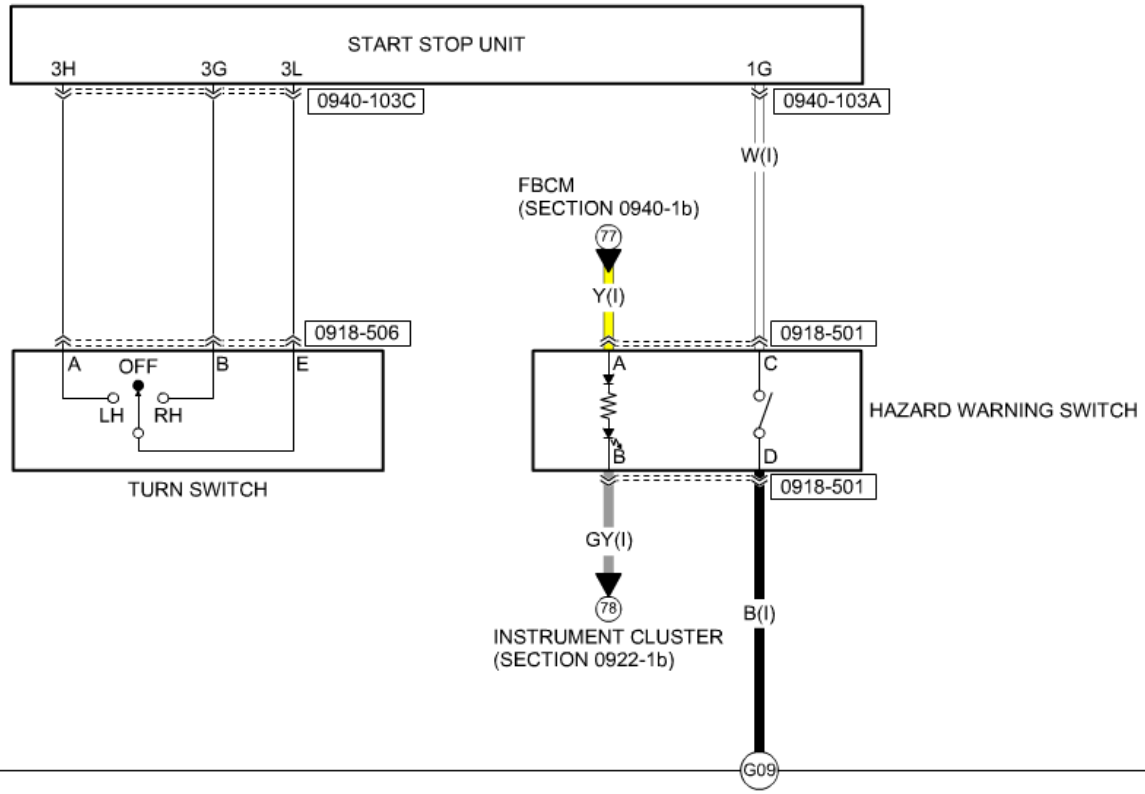
START STOP UNIT
3H
3G
3L
1G
0940-103C
0940-103A
W(I)
FBCM
(SECTION 0940-1b)
77
Y(I)
0918-506
0918-501
A
OFF
B
E
LH
RH
TURN SWITCH
A
C
B
D
HAZARD WARNING SWITCH
0918-501
GY(I)
78
INSTRUMENT CLUSTER
(SECTION 0922-1b)
B(I)
G09

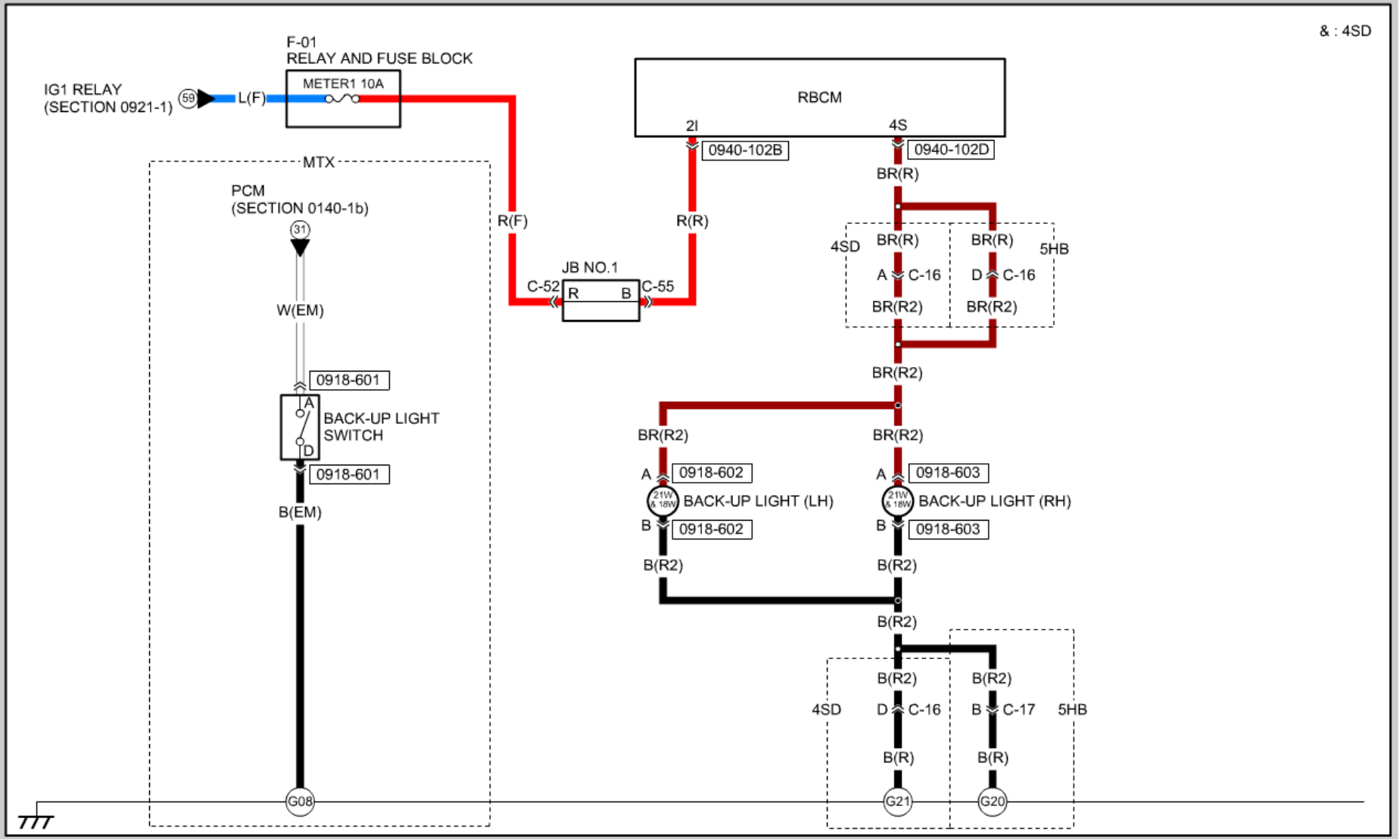
& : 4SD
F-01
RELAY AND FUSE BLOCK
METER1 10A
IG1 RELAY
(SECTION 0921-1)
59
L(F)
RBCM
2I
4S
0940-102B
0940-102D
BR(R)
MTX
PCM
(SECTION 0140-1b)
31
R(F)
R(R)
JB NO.1
C-52
R
B
C-55
4SD
BR(R)
A
C-16
BR(R2)
BR(R)
D
C-16
BR(R2)
5HB
W(EM)
0918-601
A
D
BACK-UP LIGHT
SWITCH
0918-601
B(EM)
BR(R2)
BR(R2)
A
0918-602
21W & 18W
BACK-UP LIGHT (LH)
B
0918-602
B(R2)
A
0918-603
21W & 18W
BACK-UP LIGHT (RH)
B
0918-603
B(R2)
B(R2)
B(R2)
B(R2)
4SD
D
C-16
B(R)
B(R2)
B
C-17
B(R)
5HB
G08
G21
G20

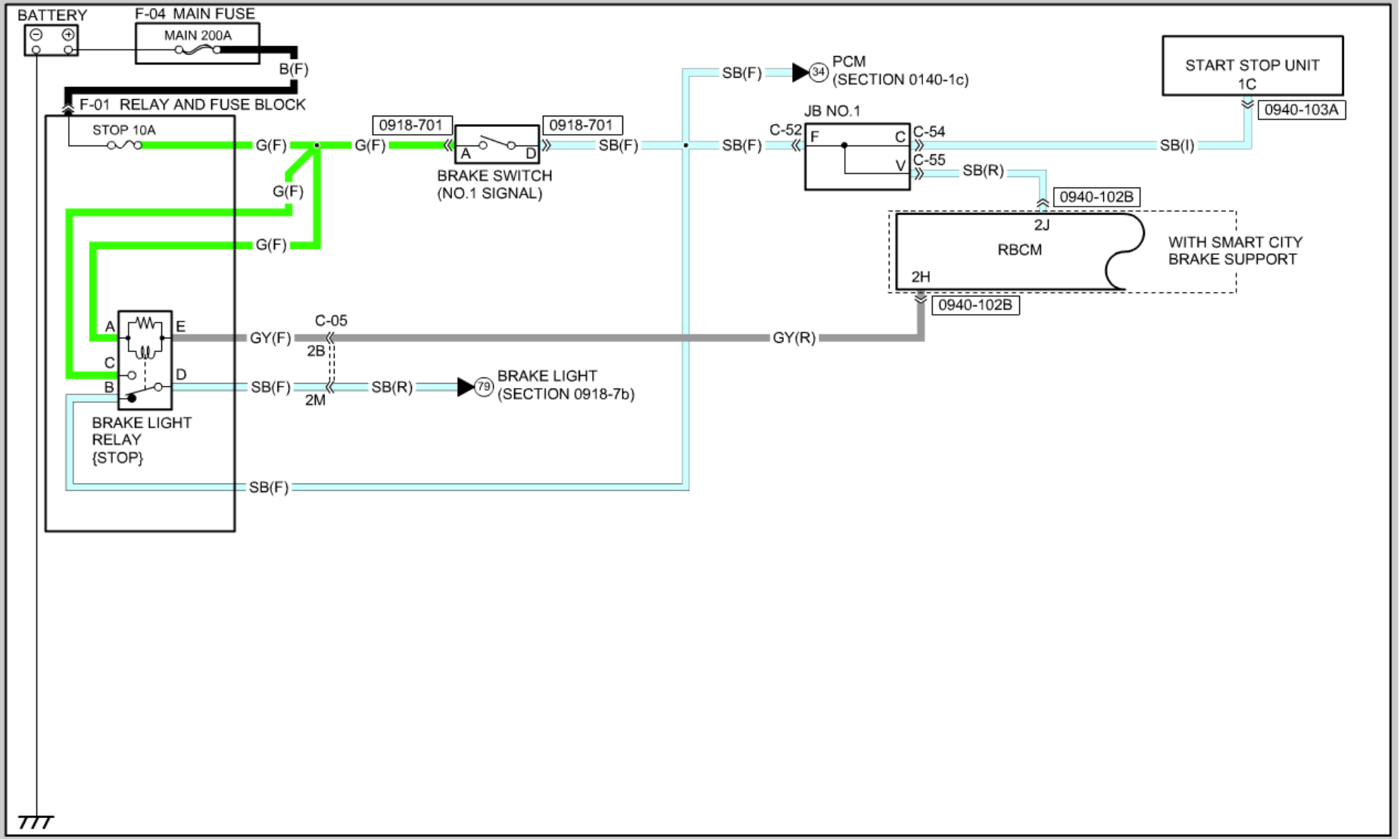
BATTERY
F-04 MAIN FUSE
MAIN 200A
B(F)
F-01 RELAY AND FUSE BLOCK
STOP 10A
G(F)
G(F)
G(F)
G(F)
0918-701
0918-701
A
D
BRAKE SWITCH
(NO.1 SIGNAL)
SB(F)
SB(F)
SB(F)
34
PCM
(SECTION 0140-1c)
JB NO.1
C-52
F
C
C-54
V
C-55
SB(R)
SB(I)
START STOP UNIT
1C
0940-103A
0940-102B
2J
RBCM
2H
WITH SMART CITY
BRAKE SUPPORT
0940-102B
A
E
C
D
B
BRAKE LIGHT
RELAY
{STOP}
GY(F)
C-05
2B
GY(R)
SB(F)
2M
SB(R)
79
BRAKE LIGHT
(SECTION 0918-7b)
SB(F)

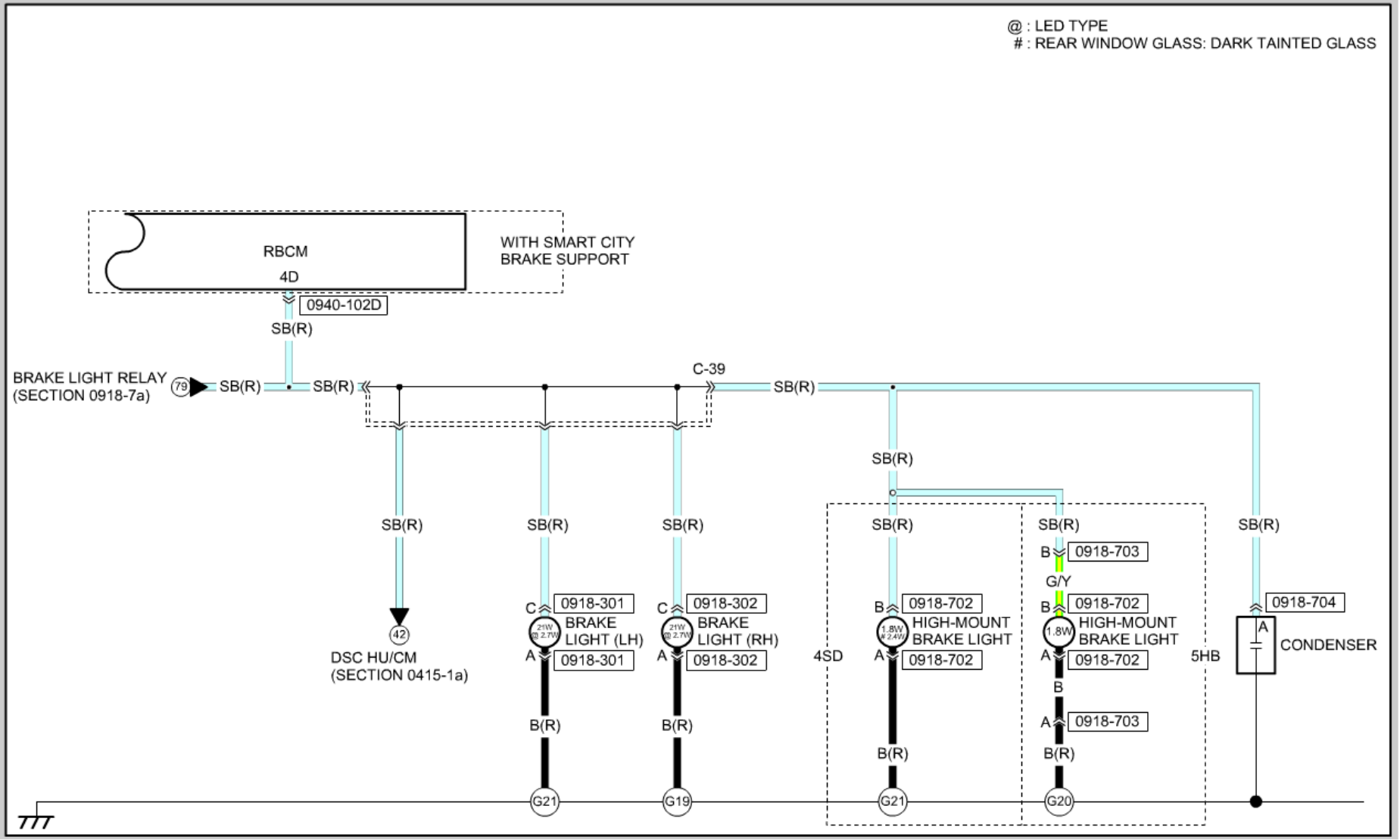
@ : LED TYPE
# : REAR WINDOW GLASS: DARK TAINTED GLASS
RBCM
4D
WITH SMART CITY BRAKE SUPPORT
0940-102D
SB(R)
BRAKE LIGHT RELAY (SECTION 0918-7a)
79
SB(R)
SB(R)
C-39
SB(R)
SB(R)
SB(R)
SB(R)
SB(R)
SB(R)
SB(R)
SB(R)
42
DSC HU/CM (SECTION 0415-1a)
C
0918-301
21W @ 2.7W
BRAKE LIGHT (LH)
A
0918-301
B(R)
G21
C
0918-302
21W @ 2.7W
BRAKE LIGHT (RH)
A
0918-302
B(R)
G19
4SD
B
0918-702
1.8W # 2.4W
HIGH-MOUNT BRAKE LIGHT
A
0918-702
B(R)
G21
B
0918-703
G/Y
B
0918-702
1.8W
HIGH-MOUNT BRAKE LIGHT
A
0918-702
B
A
0918-703
B(R)
G20
5HB
0918-704
A
CONDENSER

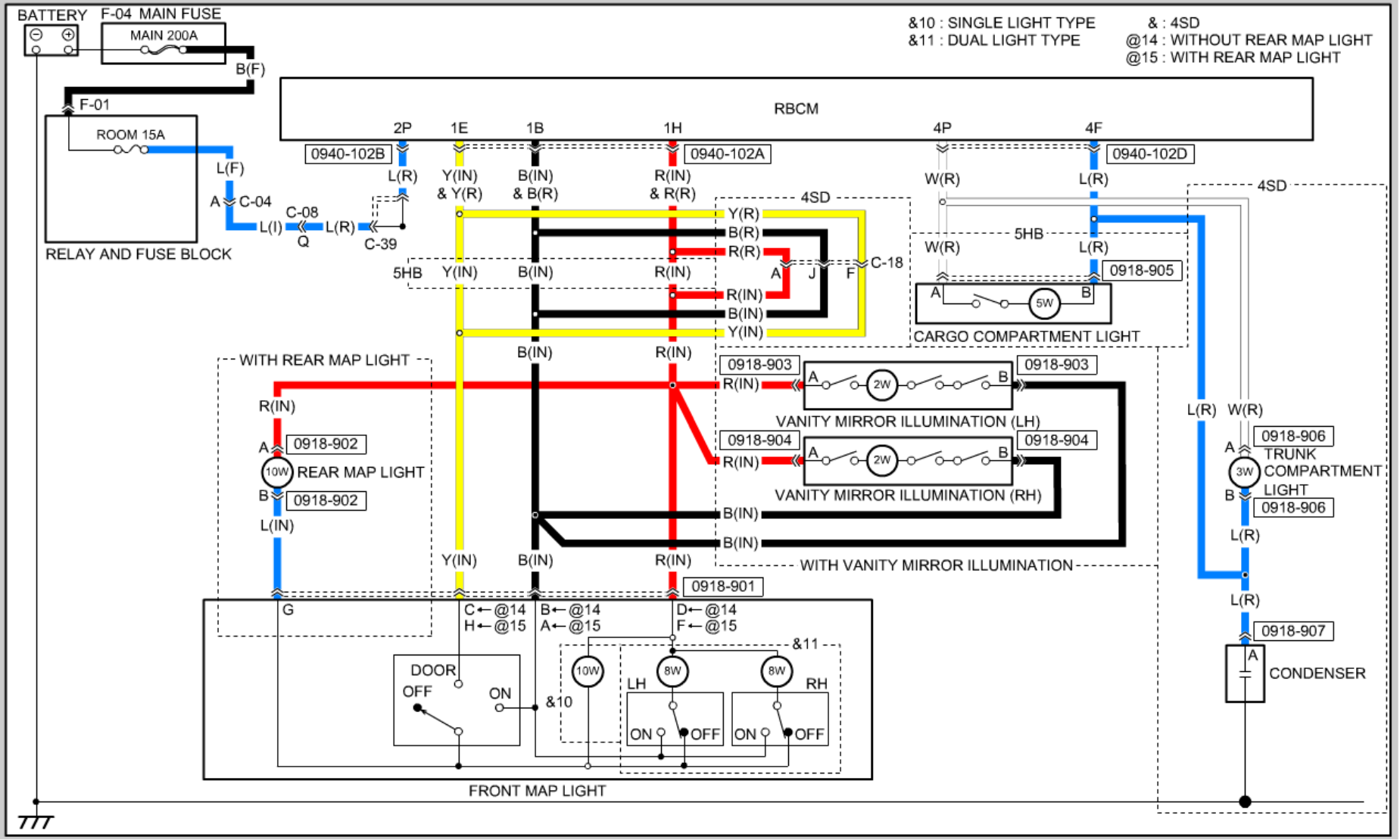
BATTERY
F-04 MAIN FUSE
MAIN 200A
B(F)
F-01
ROOM 15A
L(F)
A C-04
C-08
L(I)
L(R)
Q
C-39
RELAY AND FUSE BLOCK
&10 : SINGLE LIGHT TYPE
&11 : DUAL LIGHT TYPE
& : 4SD
@14 : WITHOUT REAR MAP LIGHT
@15 : WITH REAR MAP LIGHT
RBCM
2P
1E
1B
1H
4P
4F
0940-102B
0940-102A
0940-102D
L(R)
Y(IN) & Y(R)
B(IN) & B(R)
R(IN) & R(R)
W(R)
L(R)
4SD
5HB
Y(R)
B(R)
R(R)
C-18
A
J
F
R(IN)
B(IN)
Y(IN)
0918-905
5W
CARGO COMPARTMENT LIGHT
WITH REAR MAP LIGHT
0918-903
2W
VANITY MIRROR ILLUMINATION (LH)
0918-904
VANITY MIRROR ILLUMINATION (RH)
0918-902
10W
REAR MAP LIGHT
L(IN)
WITH VANITY MIRROR ILLUMINATION
0918-901
G
C ← @14
H ← @15
B ← @14
A ← @15
D ← @14
F ← @15
&11
DOOR
OFF
ON
&10
8W
LH
RH
ON
OFF
FRONT MAP LIGHT
0918-906
3W
TRUNK COMPARTMENT LIGHT
0918-907
CONDENSER

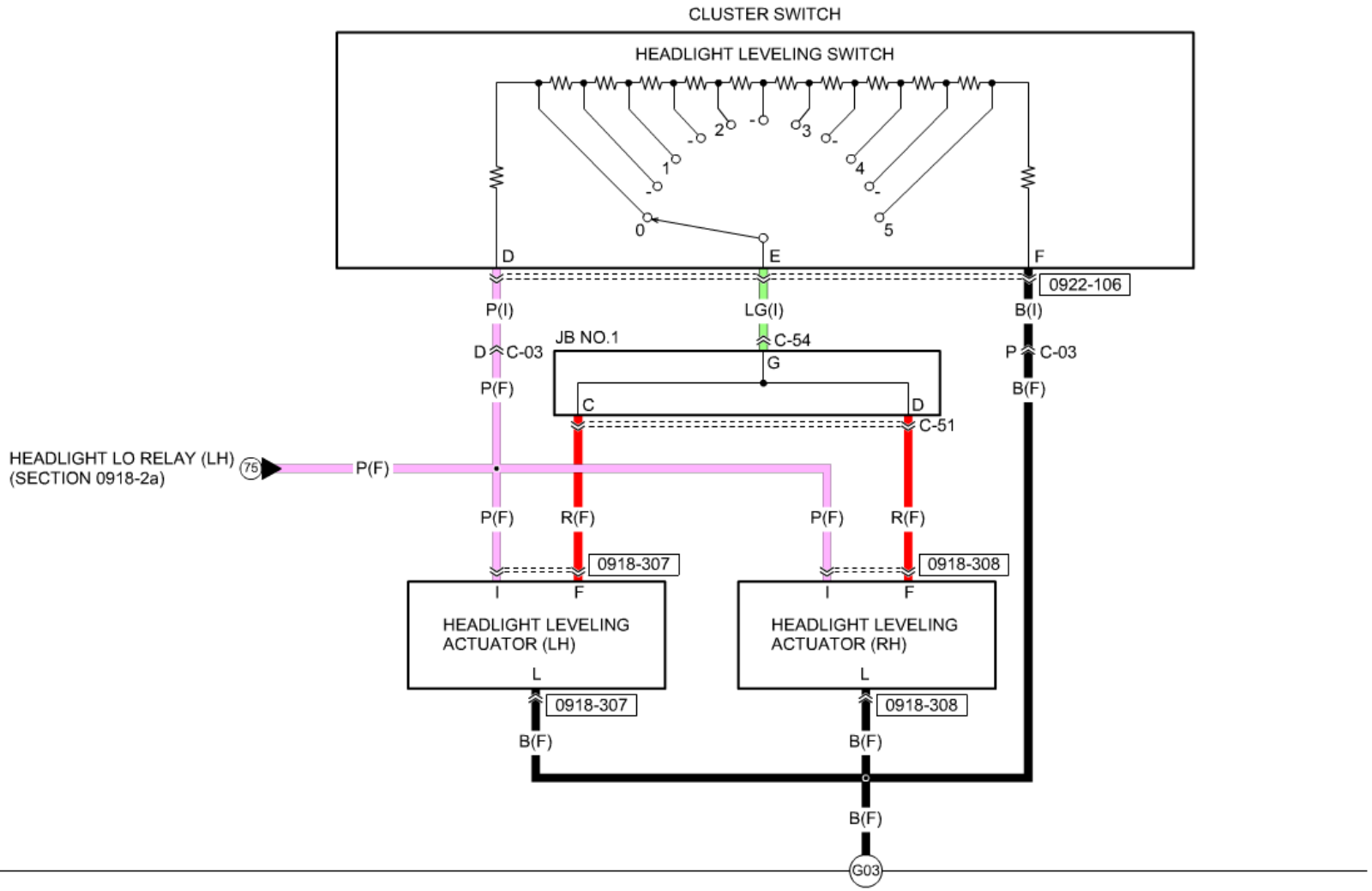
CLUSTER SWITCH
HEADLIGHT LEVELING SWITCH
0
1
2
3
4
5
D
E
F
0922-106
P(I)
LG(I)
B(I)
D C-03
JB NO.1
C-54
G
P C-03
P(F)
B(F)
C
D
C-51
HEADLIGHT LO RELAY (LH)
(SECTION 0918-2a)
75
P(F)
P(F)
R(F)
P(F)
R(F)
0918-307
0918-308
I
F
I
F
HEADLIGHT LEVELING
ACTUATOR (LH)
HEADLIGHT LEVELING
ACTUATOR (RH)
L
L
0918-307
0918-308
B(F)
B(F)
B(F)
G03

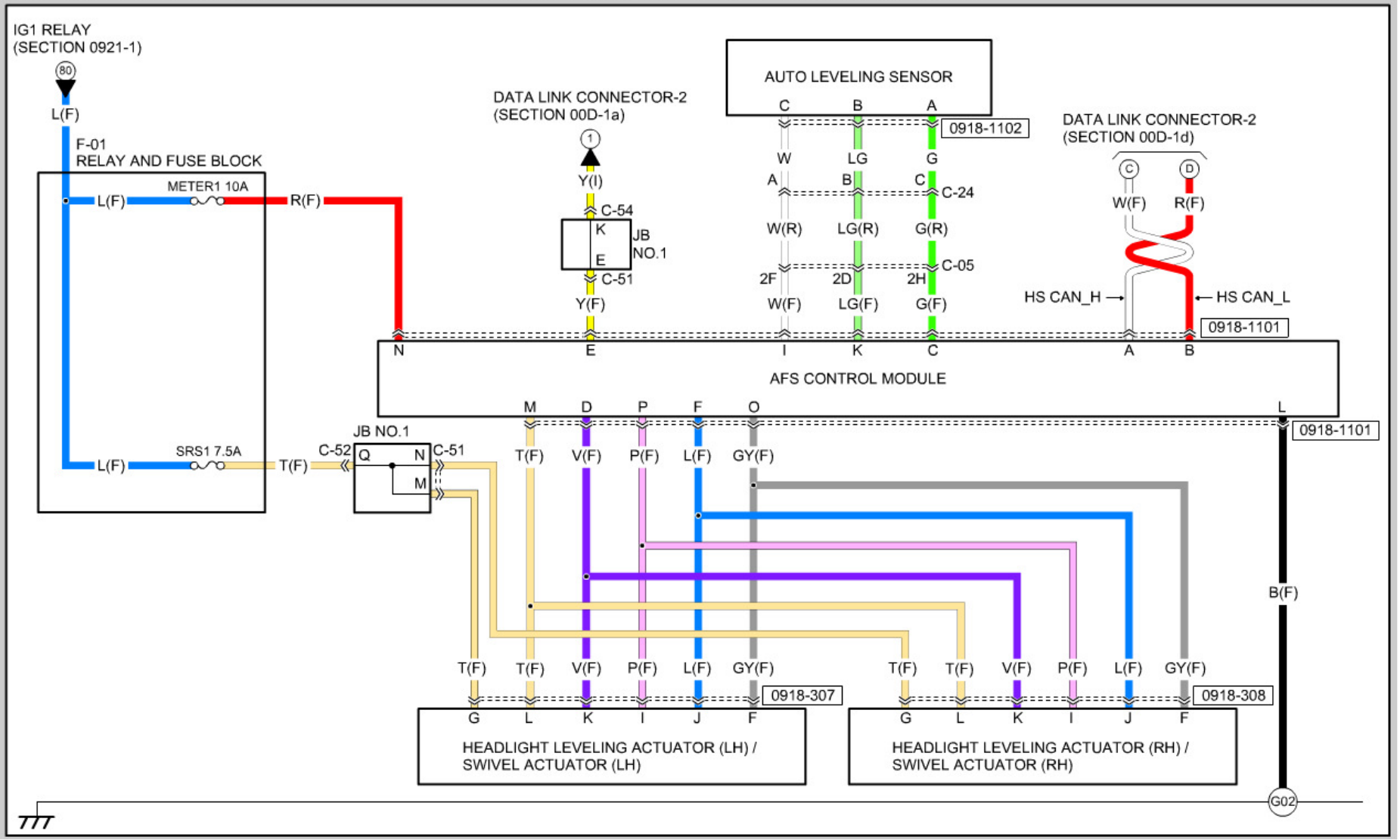
IG1 RELAY
(SECTION 0921-1)
80
L(F)
F-01
RELAY AND FUSE BLOCK
METER1 10A
L(F)
R(F)
SRS1 7.5A
L(F)
T(F)
DATA LINK CONNECTOR-2
(SECTION 00D-1a)
1
Y(I)
C-54
K
JB
NO.1
E
C-51
Y(F)
AUTO LEVELING SENSOR
C
B
A
0918-1102
W
LG
G
A
B
C
C-24
W(R)
LG(R)
G(R)
C-05
2F
2D
2H
W(F)
LG(F)
G(F)
DATA LINK CONNECTOR-2
(SECTION 00D-1d)
C
D
W(F)
R(F)
HS CAN_H
HS CAN_L
0918-1101
N
E
I
K
C
A
B
AFS CONTROL MODULE
M
D
P
F
O
L
0918-1101
JB NO.1
C-52
Q
N
C-51
M
T(F)
V(F)
P(F)
L(F)
GY(F)
B(F)
T(F)
T(F)
V(F)
P(F)
L(F)
GY(F)
0918-307
G
L
K
I
J
F
HEADLIGHT LEVELING ACTUATOR (LH) /
SWIVEL ACTUATOR (LH)
T(F)
T(F)
V(F)
P(F)
L(F)
GY(F)
0918-308
G
L
K
I
J
F
HEADLIGHT LEVELING ACTUATOR (RH) /
SWIVEL ACTUATOR (RH)
G02

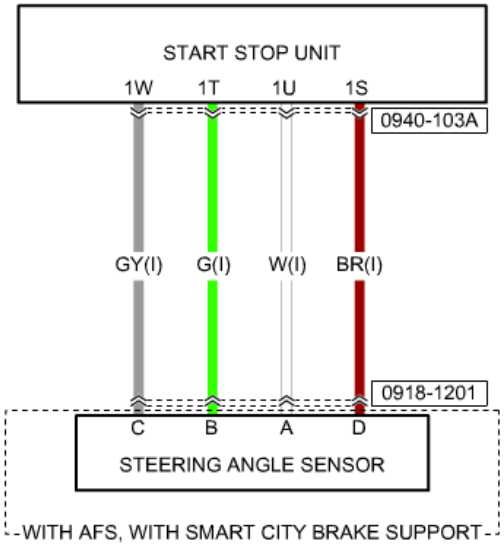
START STOP UNIT
1W
1T
1U
1S
0940-103A
GY(I)
G(I)
W(I)
BR(I)
0918-1201
C
B
A
D
STEERING ANGLE SENSOR
WITH AFS, WITH SMART CITY BRAKE SUPPORT

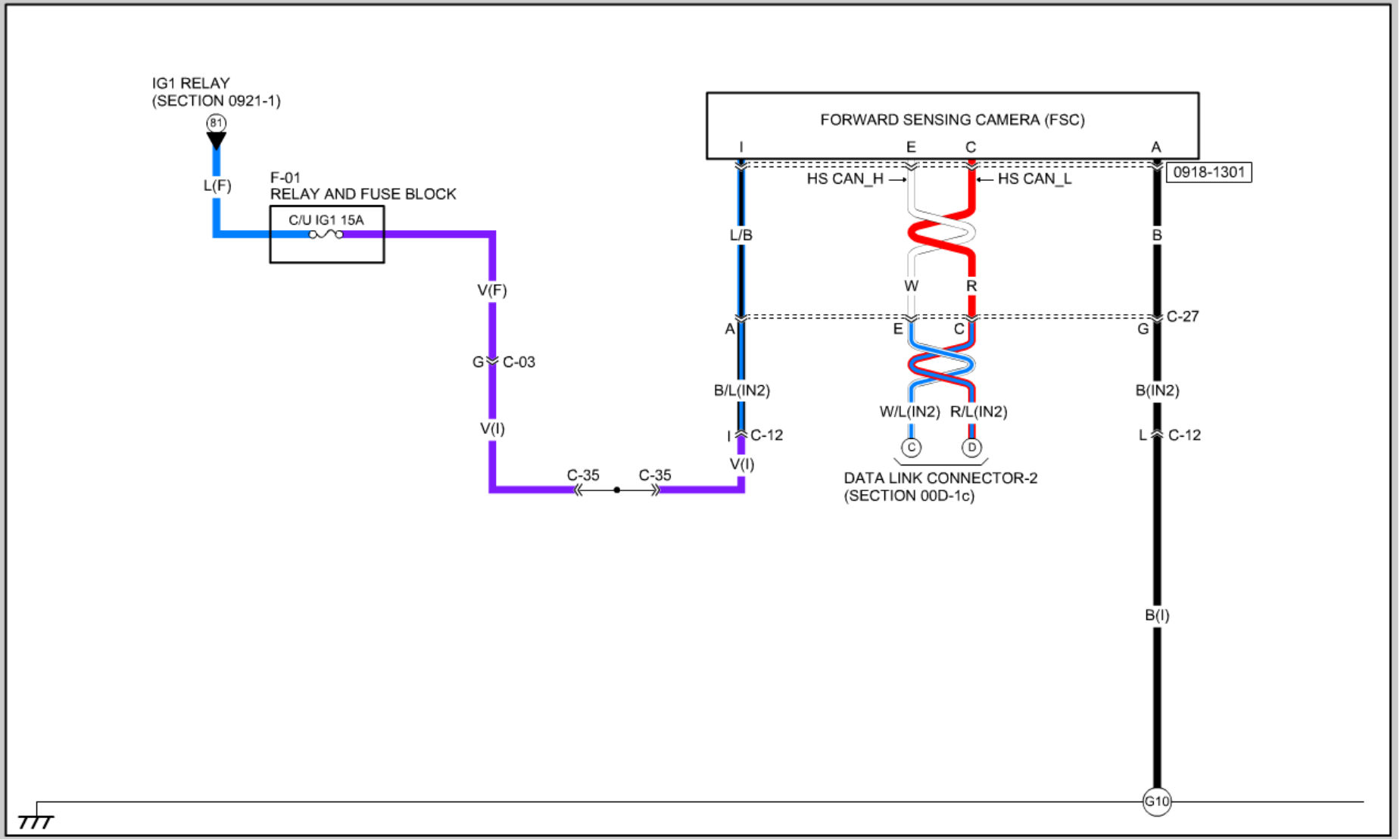
IG1 RELAY
(SECTION 0921-1)
81
L(F)
F-01
RELAY AND FUSE BLOCK
C/U IG1 15A
V(F)
G
C-03
V(I)
C-35
C-35
FORWARD SENSING CAMERA (FSC)
I
E
C
A
HS CAN_H
HS CAN_L
0918-1301
L/B
B
W
R
A
E
C
G
C-27
B/L(IN2)
B(IN2)
W/L(IN2)
R/L(IN2)
I
C-12
L
C-12
V(I)
C
D
DATA LINK CONNECTOR-2
(SECTION 00D-1c)
B(I)
G10

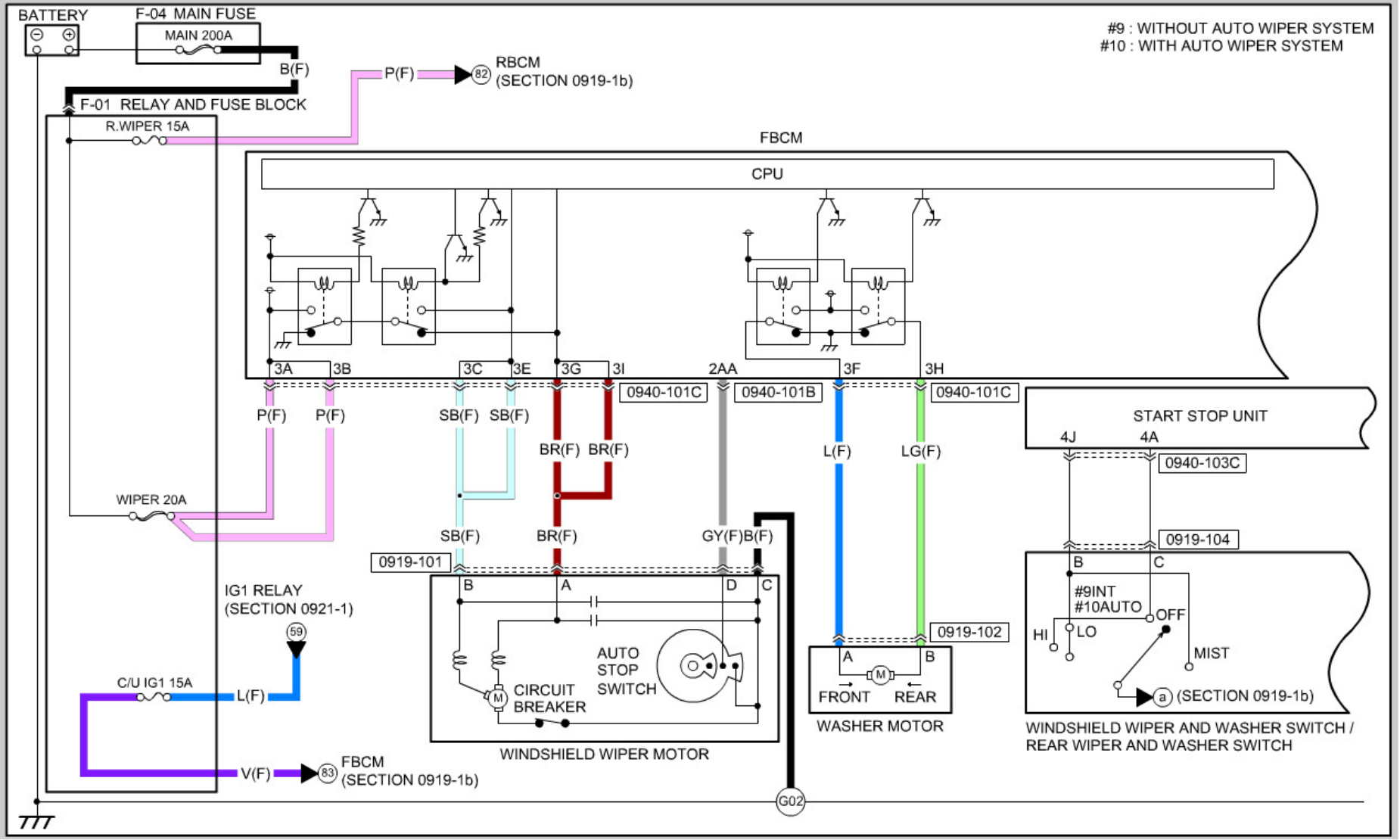
BATTERY
F-04 MAIN FUSE
MAIN 200A
B(F)
P(F)
82
RBCM
(SECTION 0919-1b)
#9 : WITHOUT AUTO WIPER SYSTEM
#10 : WITH AUTO WIPER SYSTEM
F-01 RELAY AND FUSE BLOCK
R.WIPER 15A
FBCM
CPU
3A
3B
3C
3E
3G
3I
2AA
3F
3H
0940-101C
0940-101B
0940-101C
P(F)
P(F)
SB(F)
SB(F)
BR(F)
BR(F)
L(F)
LG(F)
START STOP UNIT
4J
4A
0940-103C
WIPER 20A
SB(F)
BR(F)
GY(F)B(F)
0919-104
0919-101
B
C
B
A
D
C
#9INT
#10AUTO
OFF
HI
LO
MIST
IG1 RELAY
(SECTION 0921-1)
59
0919-102
AUTO
STOP
SWITCH
A
B
C/U IG1 15A
L(F)
CIRCUIT
BREAKER
FRONT
REAR
a
(SECTION 0919-1b)
WASHER MOTOR
WINDSHIELD WIPER AND WASHER SWITCH /
REAR WIPER AND WASHER SWITCH
WINDSHIELD WIPER MOTOR
V(F)
83
FBCM
(SECTION 0919-1b)
G02

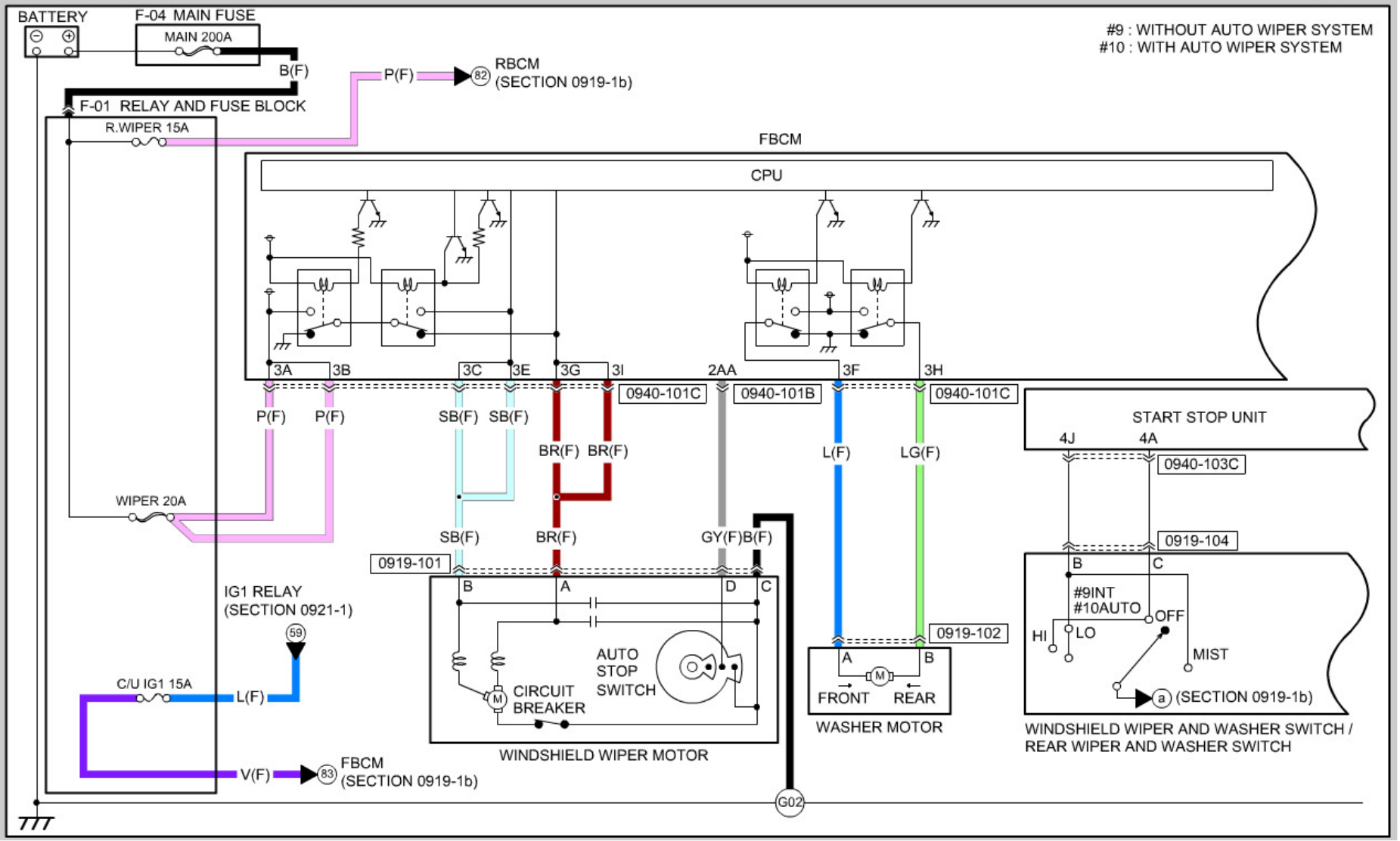
BATTERY
F-04 MAIN FUSE
MAIN 200A
B(F)
P(F)
82
RBCM
(SECTION 0919-1b)
#9 : WITHOUT AUTO WIPER SYSTEM
#10 : WITH AUTO WIPER SYSTEM
F-01 RELAY AND FUSE BLOCK
R.WIPER 15A
FBCM
CPU
3A
3B
3C
3E
3G
3I
2AA
3F
3H
0940-101C
0940-101B
0940-101C
P(F)
P(F)
SB(F)
SB(F)
BR(F)
BR(F)
L(F)
LG(F)
START STOP UNIT
4J
4A
0940-103C
WIPER 20A
SB(F)
BR(F)
GY(F)B(F)
0919-101
0919-104
B
C
#9INT
#10AUTO
OFF
HI
LO
MIST
a
(SECTION 0919-1b)
IG1 RELAY
(SECTION 0921-1)
59
B
A
D
C
AUTO
STOP
SWITCH
CIRCUIT
BREAKER
M
0919-102
A
B
M
FRONT
REAR
WASHER MOTOR
WINDSHIELD WIPER AND WASHER SWITCH /
REAR WIPER AND WASHER SWITCH
C/U IG1 15A
L(F)
WINDSHIELD WIPER MOTOR
V(F)
83
FBCM
(SECTION 0919-1b)
G02

AUDIO SYSTEM (WITHOUT CENTER DISPLAY)

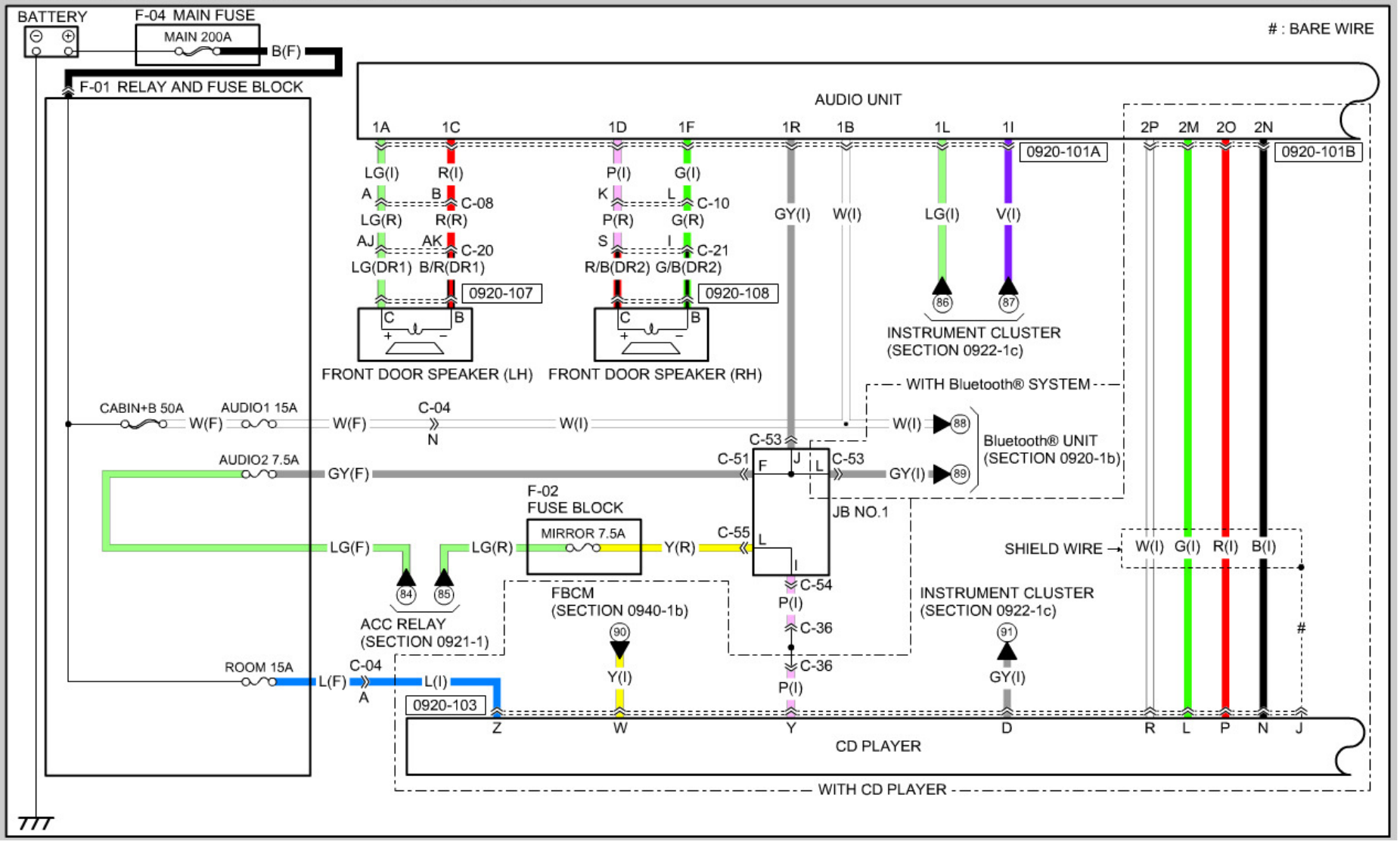

AUDIO SYSTEM (WITHOUT CENTER DISPLAY)

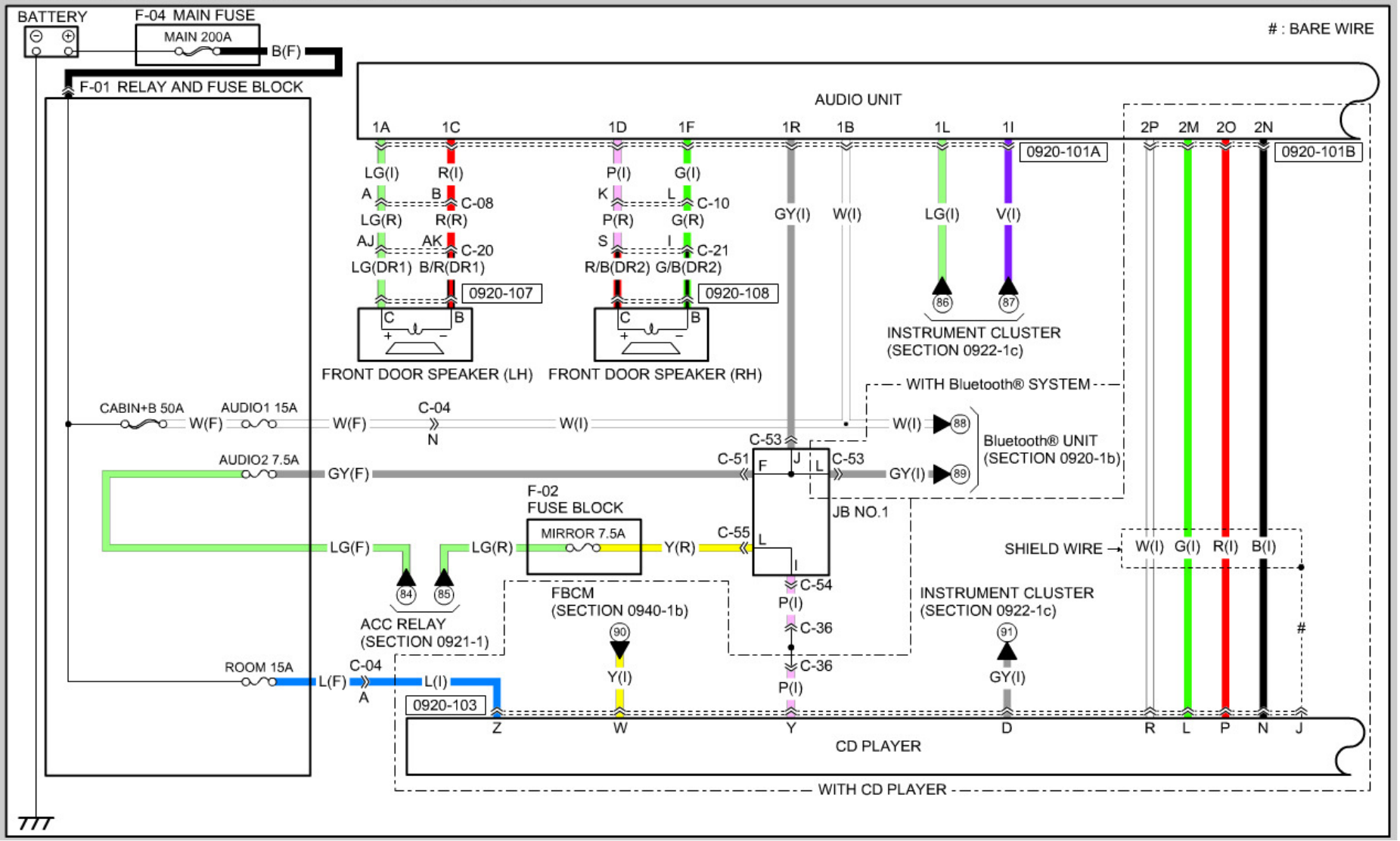

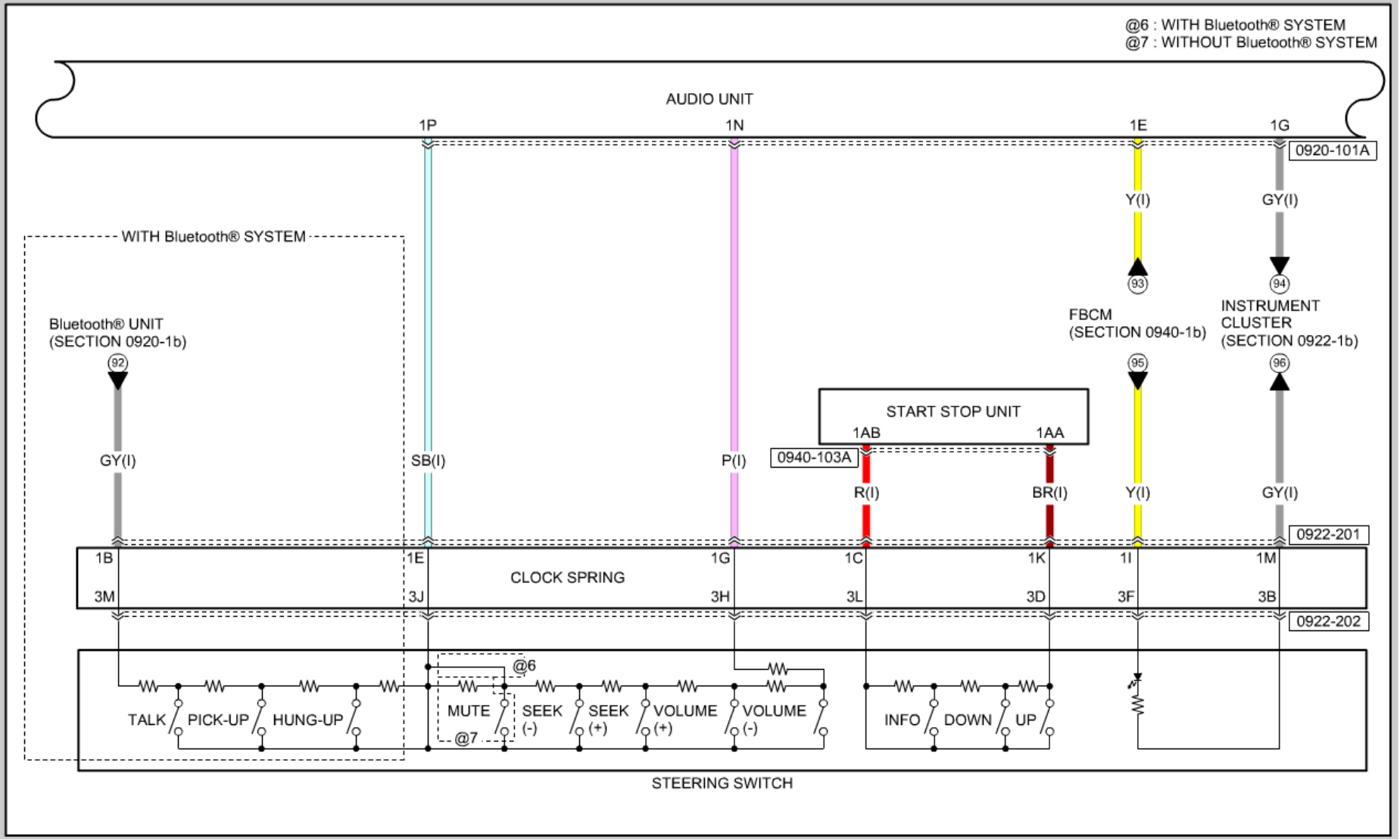
@6 : WITH Bluetooth® SYSTEM
@7 : WITHOUT Bluetooth® SYSTEM
AUDIO UNIT
1P
1N
1E
1G
0920-101A
Y(I)
GY(I)
93
94
WITH Bluetooth® SYSTEM
Bluetooth® UNIT
(SECTION 0920-1b)
92
FBCM
(SECTION 0940-1b)
95
INSTRUMENT
CLUSTER
(SECTION 0922-1b)
96
START STOP UNIT
1AB
1AA
0940-103A
GY(I)
SB(I)
P(I)
R(I)
BR(I)
Y(I)
GY(I)
0922-201
1B
3M
1E
3J
CLOCK SPRING
1G
3H
1C
3L
1K
3D
1I
3F
1M
3B
0922-202
@6
TALK
PICK-UP
HUNG-UP
MUTE
@7
SEEK (-)
SEEK (+)
VOLUME (+)
VOLUME (-)
INFO
DOWN
UP
STEERING SWITCH

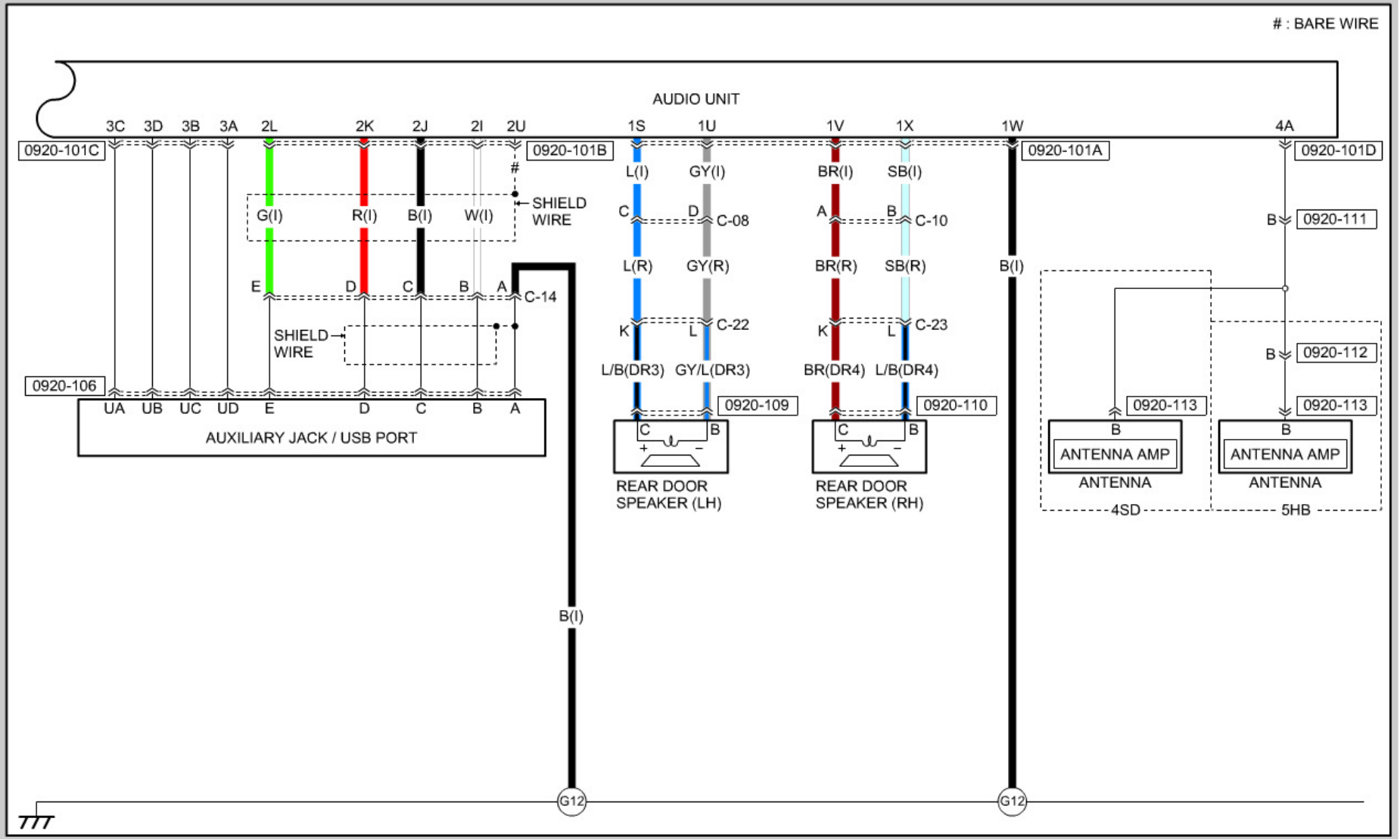
: BARE WIRE
AUDIO UNIT
3C 3D 3B 3A 2L 2K 2J 2I 2U 1S 1U 1V 1X 1W 4A
0920-101C
0920-101B
0920-101A
0920-101D
G(I) R(I) B(I) W(I)
SHIELD WIRE
E D C B A
C-14
SHIELD WIRE
0920-106
UA UB UC UD E D C B A
AUXILIARY JACK / USB PORT
B(I)
L(I) GY(I)
C D C-08
L(R) GY(R)
K L C-22
L/B(DR3) GY/L(DR3)
0920-109
REAR DOOR SPEAKER (LH)
BR(I) SB(I)
A B C-10
BR(R) SB(R)
K L C-23
BR(DR4) L/B(DR4)
0920-110
REAR DOOR SPEAKER (RH)
B(I)
B 0920-111
B 0920-112
0920-113
ANTENNA AMP
ANTENNA
4SD
5HB
G12
G12

AUDIO SYSTEM (WITH CENTER DISPLAY / WITHOUT Bose® TYPE AUDIO)

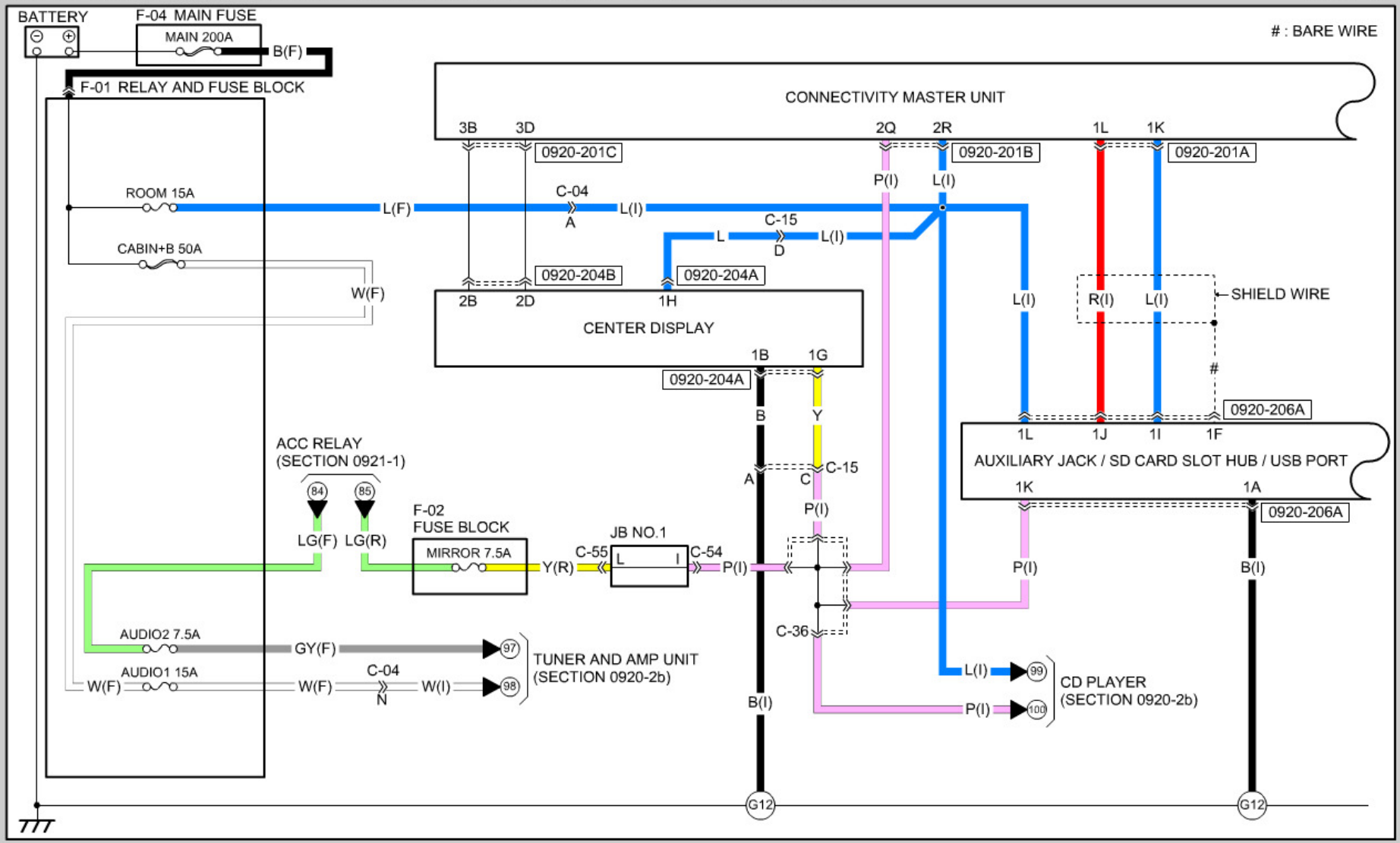

AUDIO SYSTEM (WITH CENTER DISPLAY / WITHOUT Bose® TYPE AUDIO)

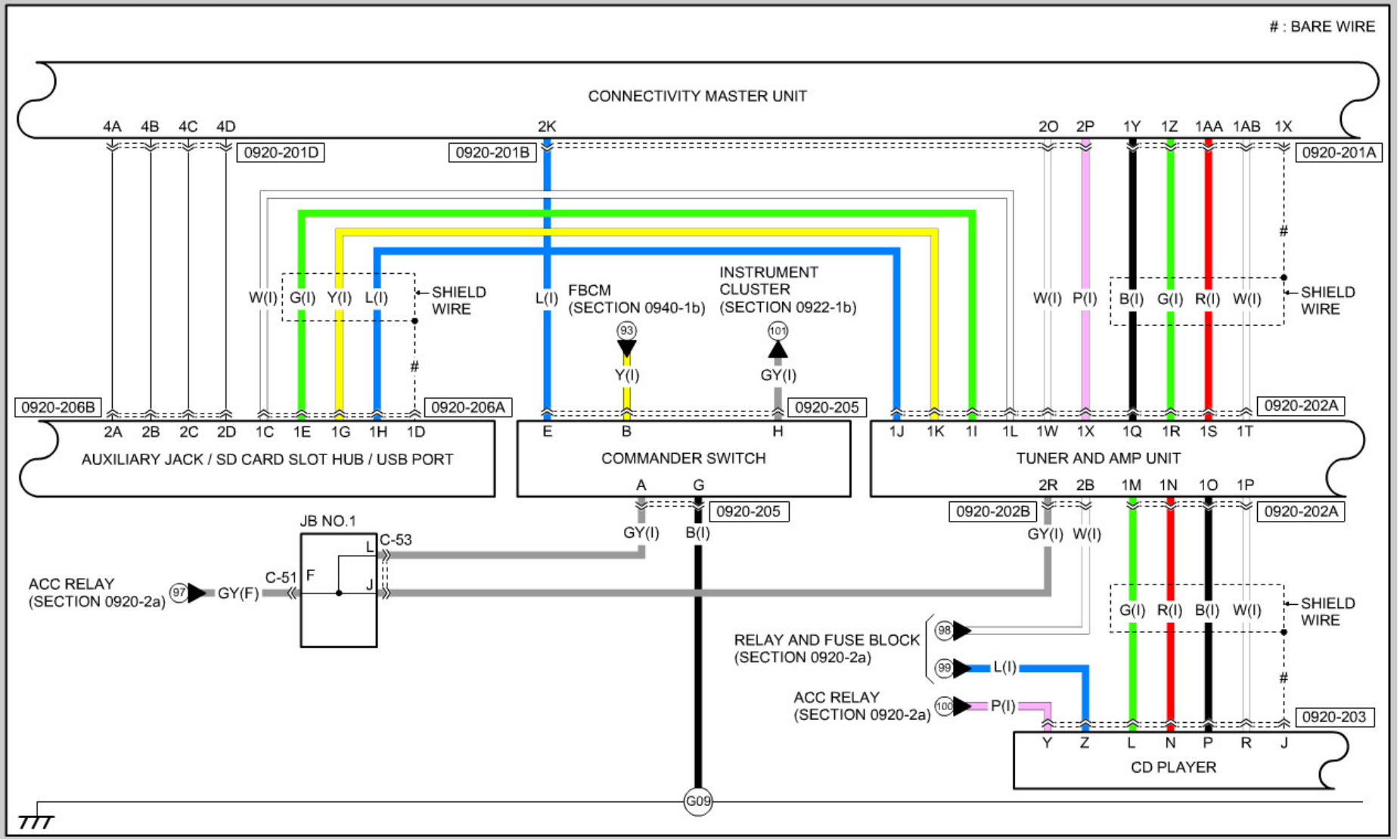

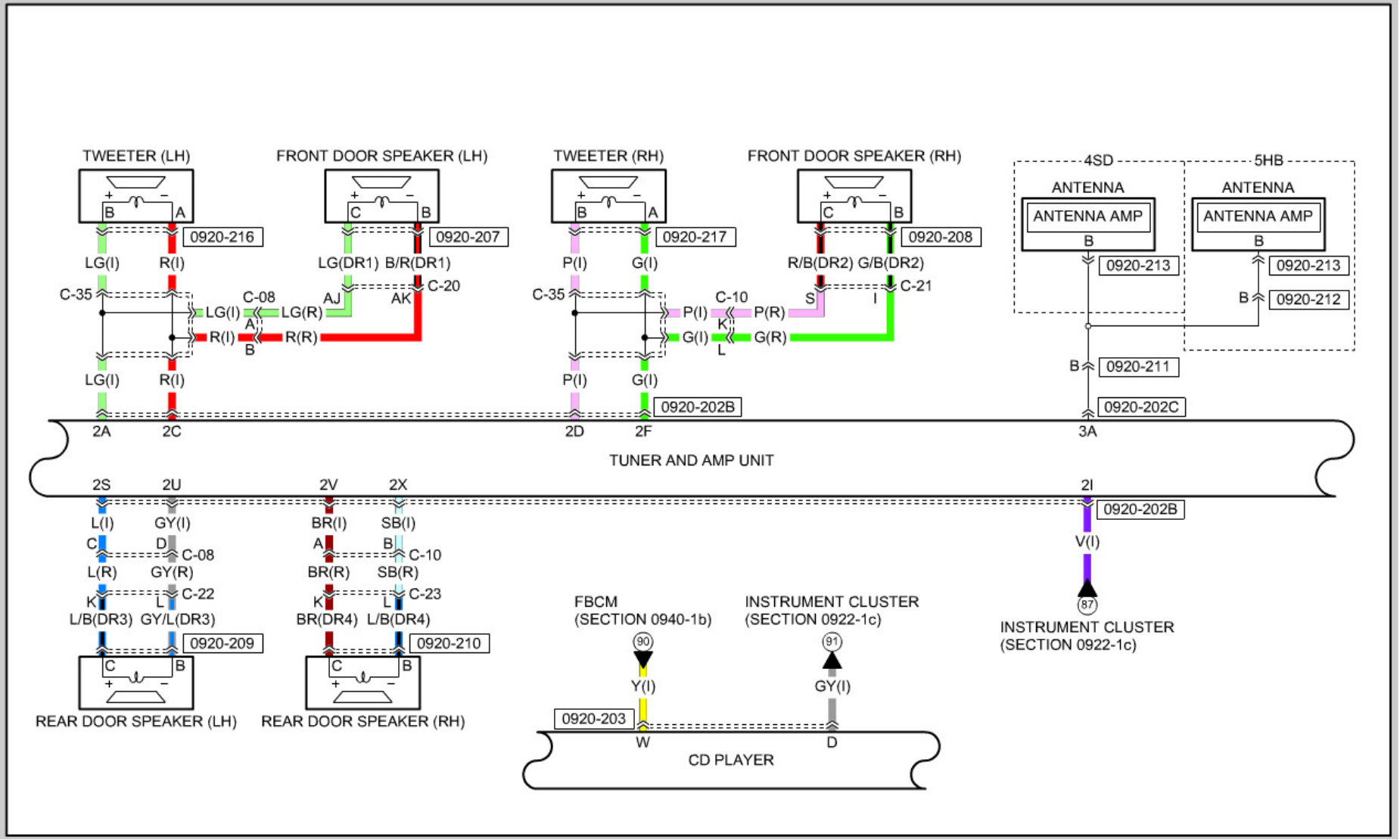
TWEETER (LH)
FRONT DOOR SPEAKER (LH)
TWEETER (RH)
FRONT DOOR SPEAKER (RH)
4SD
5HB
ANTENNA
ANTENNA AMP
0920-216
0920-207
0920-217
0920-208
0920-213
0920-212
0920-211
0920-202B
0920-202C
LG(I)
R(I)
LG(DR1)
B/R(DR1)
P(I)
G(I)
R/B(DR2)
G/B(DR2)
C-35
C-08
C-20
C-10
C-21
LG(R)
R(R)
P(R)
G(R)
2A
2C
2D
2F
3A
TUNER AND AMP UNIT
2S
2U
2V
2X
2I
L(I)
GY(I)
BR(I)
SB(I)
V(I)
C-22
C-23
L(R)
GY(R)
BR(R)
SB(R)
L/B(DR3)
GY/L(DR3)
BR(DR4)
L/B(DR4)
0920-209
0920-210
REAR DOOR SPEAKER (LH)
REAR DOOR SPEAKER (RH)
FBCM
(SECTION 0940-1b)
INSTRUMENT CLUSTER
(SECTION 0922-1c)
Y(I)
0920-203
W
D
CD PLAYER

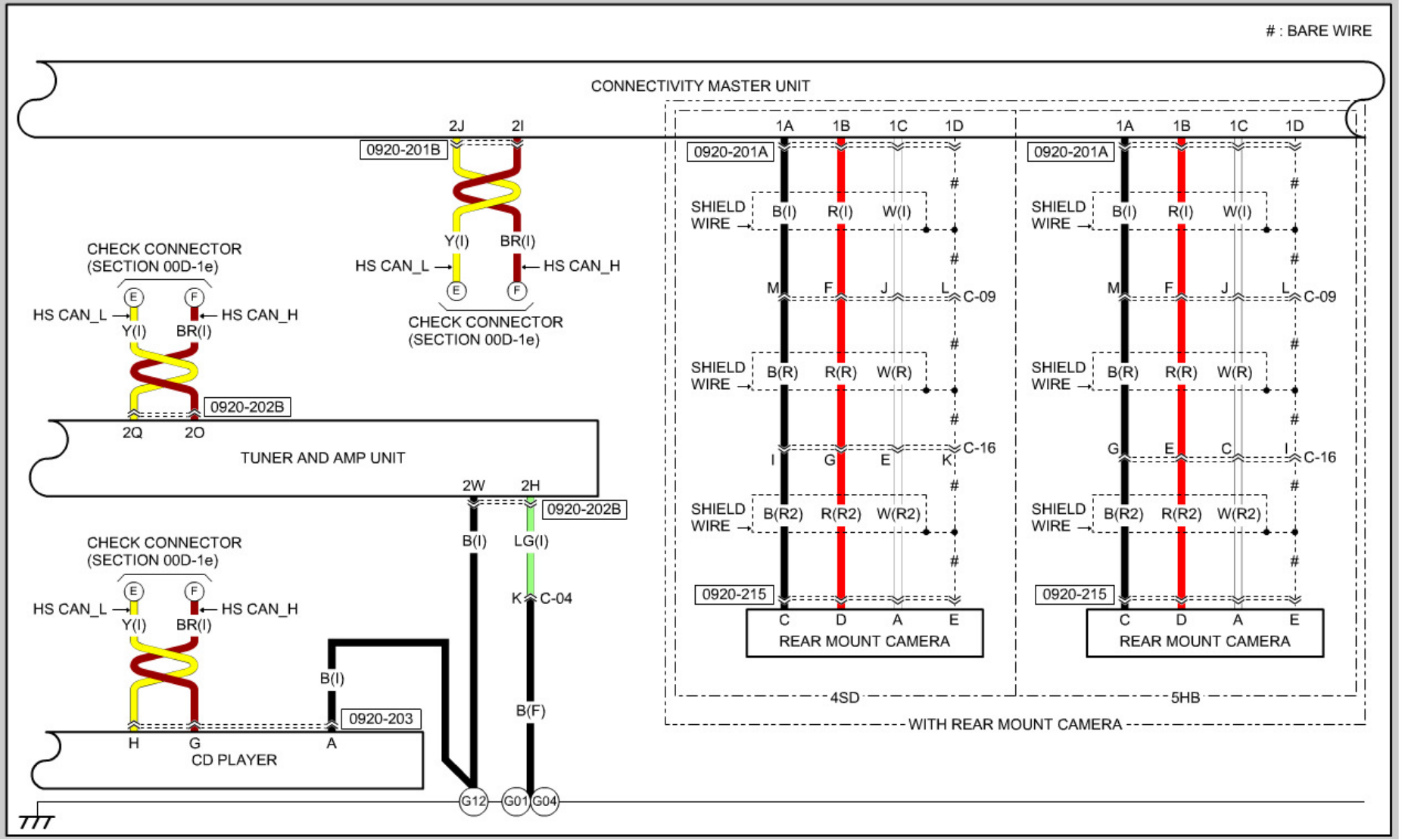
: BARE WIRE
CONNECTIVITY MASTER UNIT
2J
2I
0920-201B
Y(I)
BR(I)
HS CAN_L
HS CAN_H
CHECK CONNECTOR
(SECTION 00D-1e)
E
F
HS CAN_L
HS CAN_H
Y(I)
BR(I)
0920-202B
2Q
2O
TUNER AND AMP UNIT
2W
2H
0920-202B
B(I)
LG(I)
CHECK CONNECTOR
(SECTION 00D-1e)
HS CAN_L
HS CAN_H
Y(I)
BR(I)
K
C-04
B(I)
0920-203
B(F)
H
G
A
CD PLAYER
G12
G01
G04
1A
1B
1C
1D
0920-201A
SHIELD WIRE
B(I)
R(I)
W(I)
M
F
J
L
C-09
B(R)
R(R)
W(R)
I
G
E
K
C-16
B(R2)
R(R2)
W(R2)
0920-215
C
D
A
E
REAR MOUNT CAMERA
4SD
5HB
WITH REAR MOUNT CAMERA

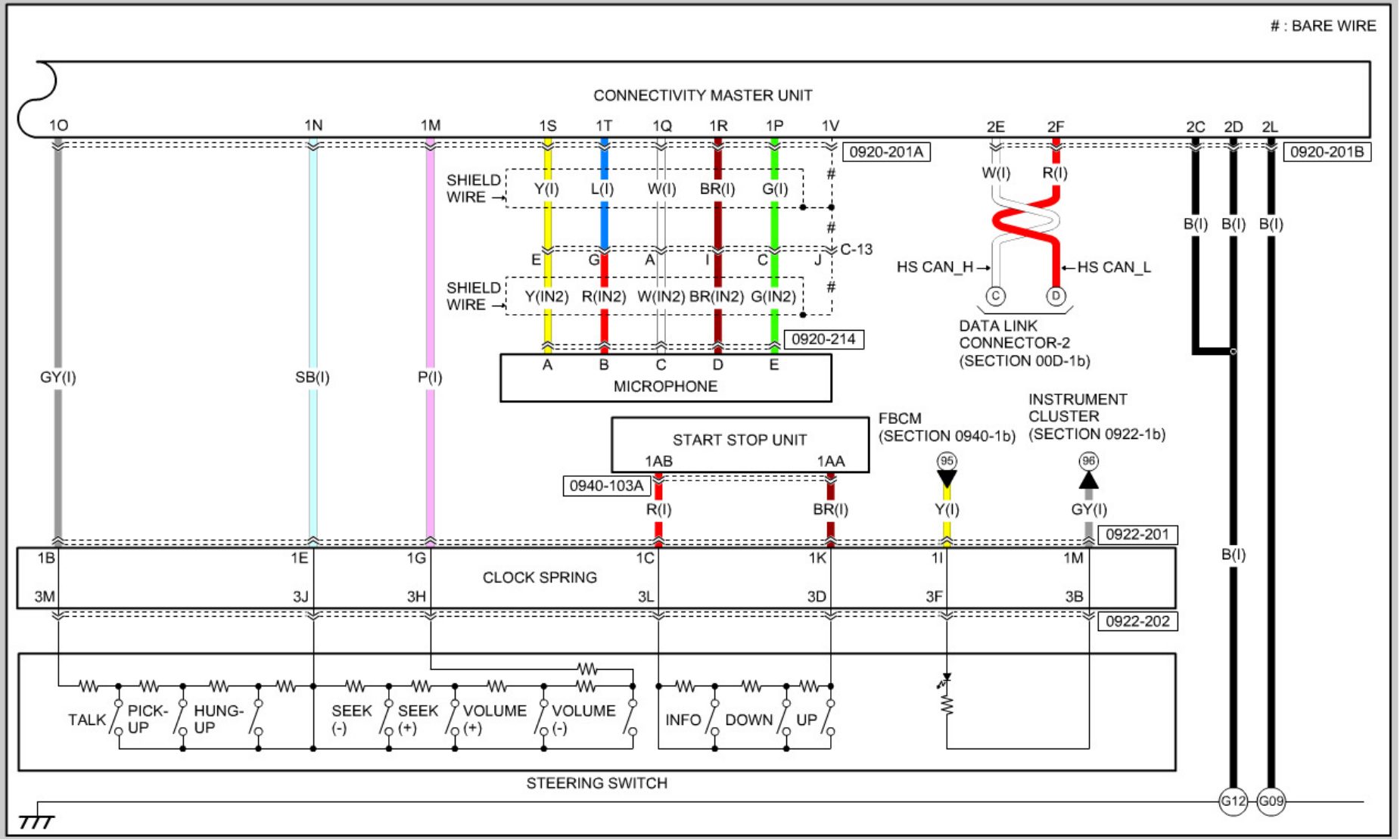
: BARE WIRE
CONNECTIVITY MASTER UNIT
1O
1N
1M
1S
1T
1Q
1R
1P
1V
2E
2F
2C
2D
2L
0920-201A
0920-201B
SHIELD WIRE
Y(I)
L(I)
W(I)
BR(I)
G(I)
C-13
E
G
A
I
C
J
Y(IN2)
R(IN2)
W(IN2)
BR(IN2)
G(IN2)
0920-214
A
B
C
D
E
MICROPHONE
GY(I)
SB(I)
P(I)
W(I)
R(I)
B(I)
HS CAN_H
HS CAN_L
DATA LINK CONNECTOR-2 (SECTION 00D-1b)
START STOP UNIT
1AB
1AA
0940-103A
R(I)
BR(I)
FBCM (SECTION 0940-1b)
95
Y(I)
INSTRUMENT CLUSTER (SECTION 0922-1b)
96
GY(I)
0922-201
1B
1E
1G
1C
1K
1I
1M
CLOCK SPRING
3M
3J
3H
3L
3D
3F
3B
0922-202
TALK
PICK-UP
HUNG-UP
SEEK (-)
SEEK (+)
VOLUME (+)
VOLUME (-)
INFO
DOWN
UP
STEERING SWITCH
G12
G09

AUDIO SYSTEM (WITH CENTER DISPLAY / Bose® TYPE AUDIO)

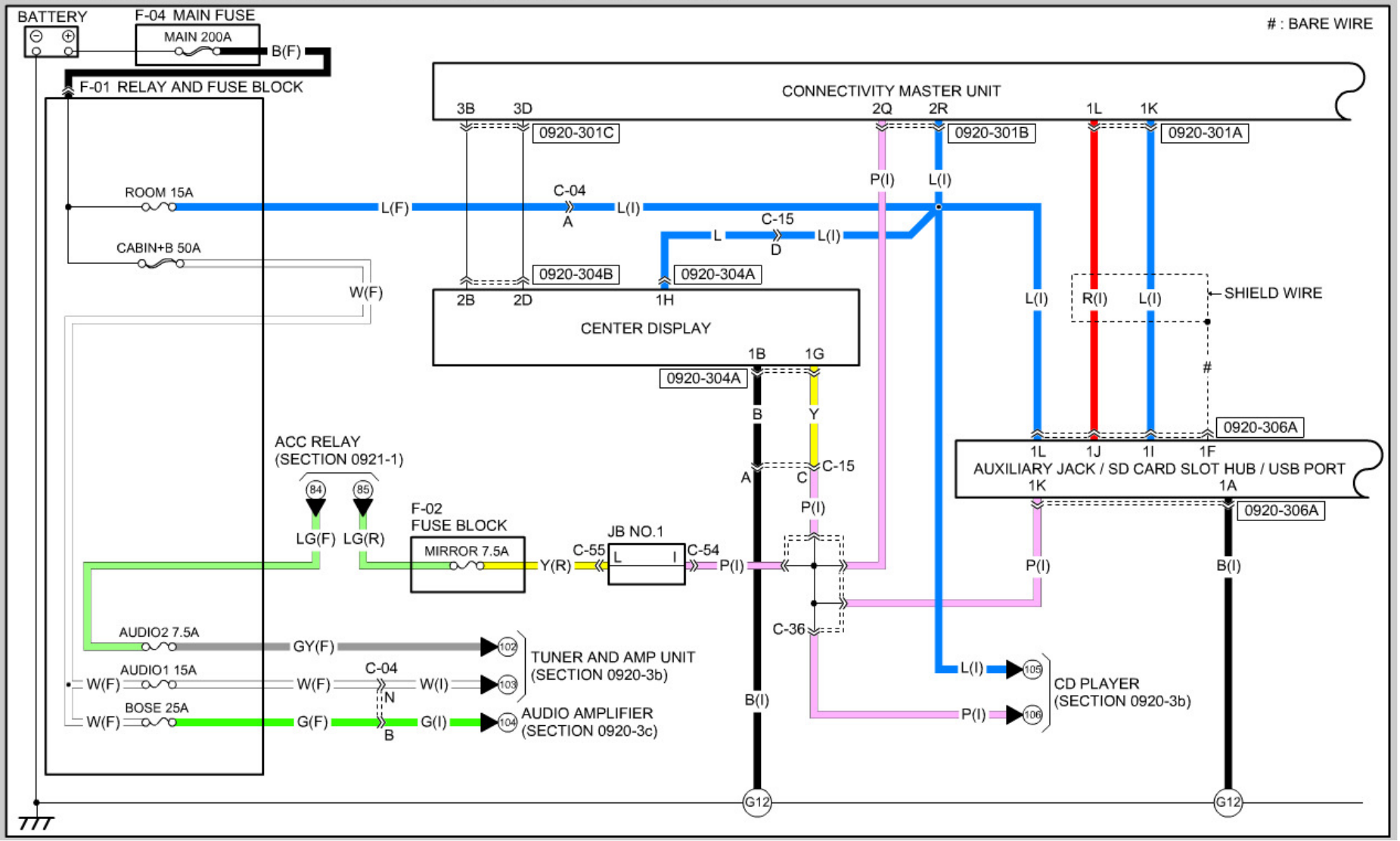

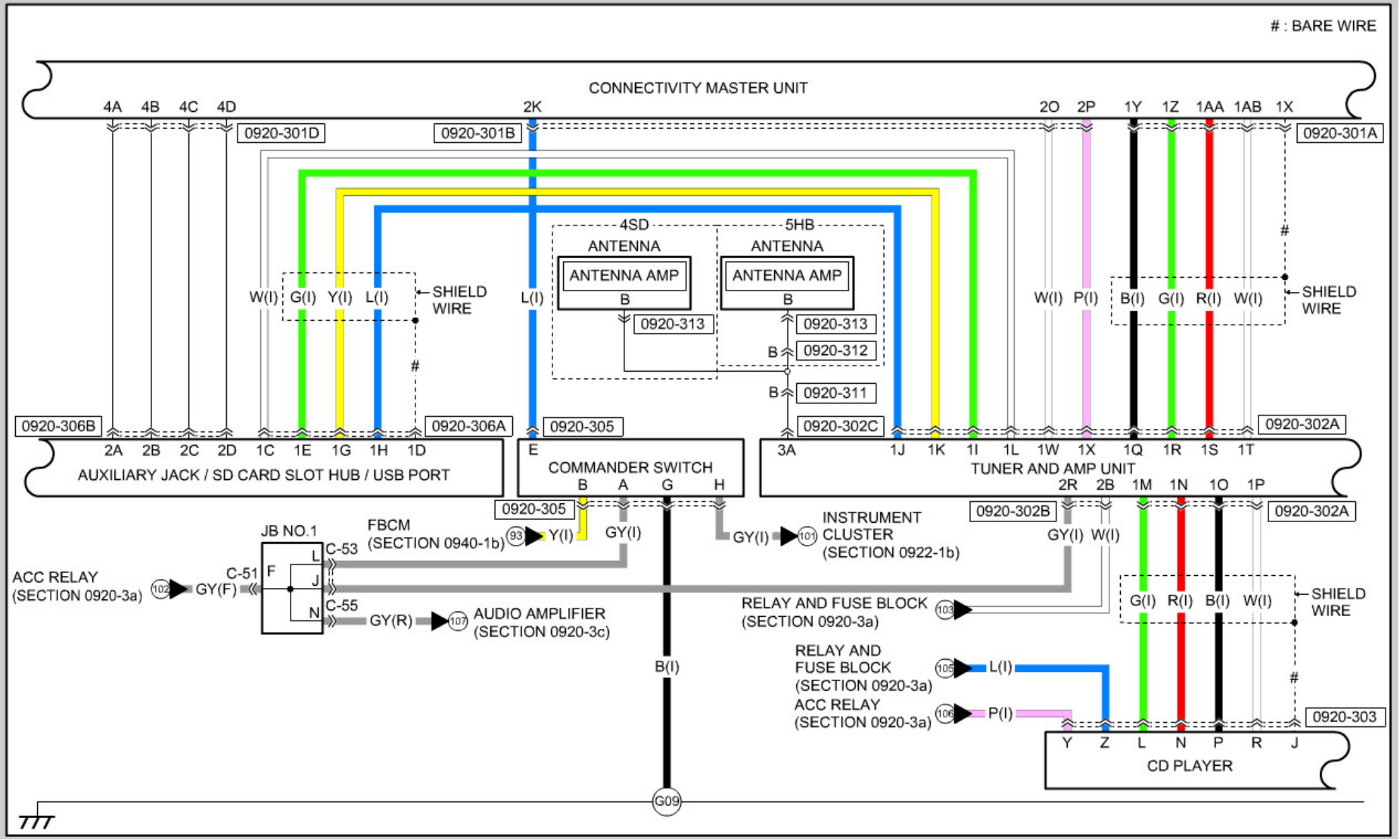
: BARE WIRE
CONNECTIVITY MASTER UNIT
4A 4B 4C 4D 2K 2O 2P 1Y 1Z 1AA 1AB 1X
0920-301D
0920-301B
0920-301A
4SD
5HB
ANTENNA
ANTENNA AMP
B
0920-313
0920-312
0920-311
W(I) G(I) Y(I) L(I)
SHIELD WIRE
L(I)
W(I) P(I)
B(I) G(I) R(I) W(I)
0920-306B
0920-306A
0920-305
0920-302C
0920-302A
2A 2B 2C 2D 1C 1E 1G 1H 1D
AUXILIARY JACK / SD CARD SLOT HUB / USB PORT
E
COMMANDER SWITCH
B A G H
3A 1J 1K 1I 1L 1W 1X 1Q 1R 1S 1T
TUNER AND AMP UNIT
2R 2B 1M 1N 1O 1P
0920-302B
JB NO.1
C-53
C-51
C-55
F L J N
FBCM (SECTION 0940-1b)
93
Y(I)
GY(I)
INSTRUMENT CLUSTER (SECTION 0922-1b)
101
ACC RELAY (SECTION 0920-3a)
102
GY(F)
GY(R)
107
AUDIO AMPLIFIER (SECTION 0920-3c)
RELAY AND FUSE BLOCK (SECTION 0920-3a)
103
G(I) R(I) B(I) W(I)
B(I)
RELAY AND FUSE BLOCK (SECTION 0920-3a)
105
L(I)
ACC RELAY (SECTION 0920-3a)
106
P(I)
0920-303
Y Z L N P R J
CD PLAYER
G09

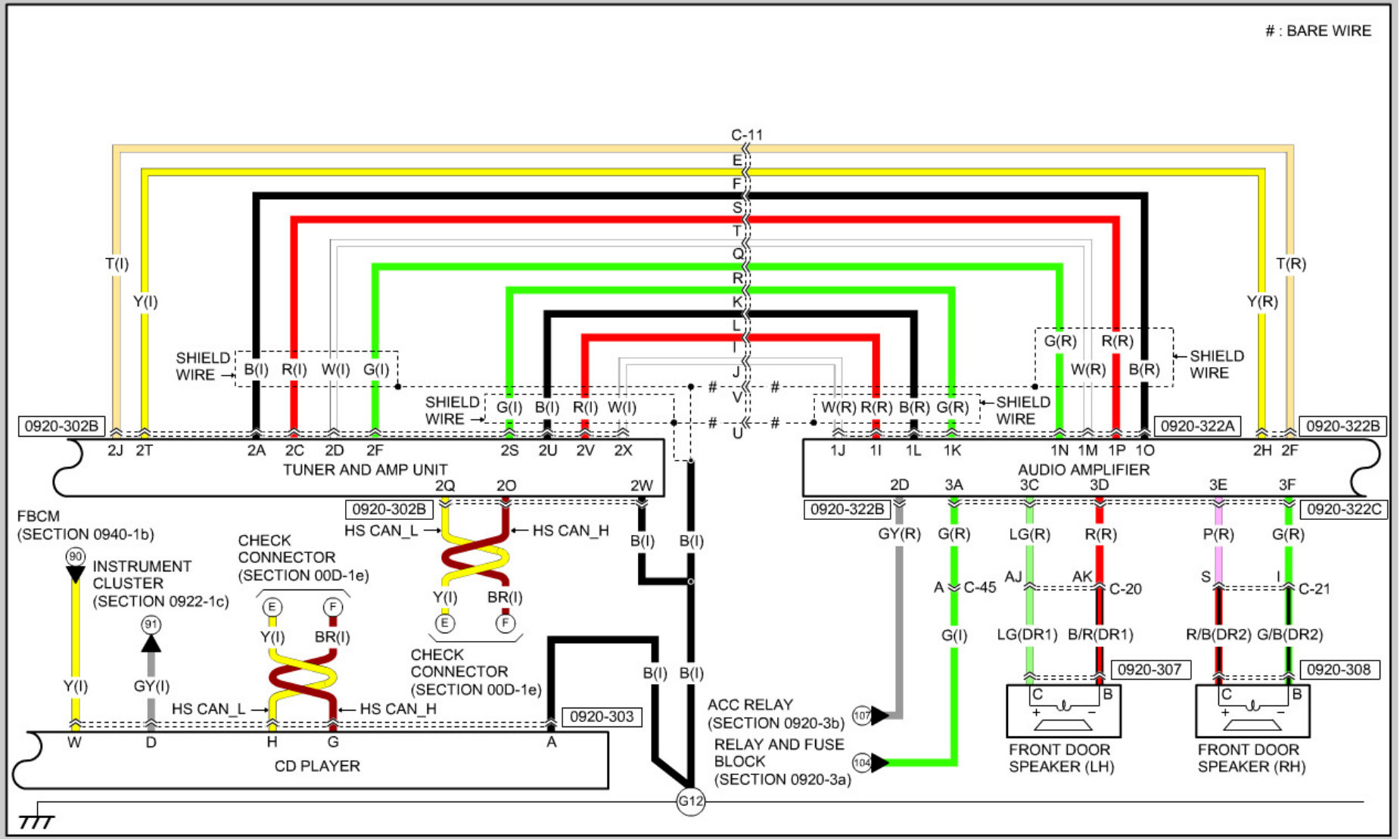
: BARE WIRE
C-11
E
F
S
T
Q
R
K
L
I
J
V
U
T(I)
Y(I)
T(R)
Y(R)
SHIELD WIRE
B(I) R(I) W(I) G(I)
G(I) B(I) R(I) W(I)
W(R) R(R) B(R) G(R)
G(R) R(R)
W(R) B(R)
0920-302B
0920-322A
0920-322B
2J 2T 2A 2C 2D 2F 2S 2U 2V 2X
TUNER AND AMP UNIT
2Q 2O 2W
1J 1I 1L 1K 1N 1M 1P 1O 2H 2F
AUDIO AMPLIFIER
2D 3A 3C 3D 3E 3F
0920-322C
FBCM
(SECTION 0940-1b)
90
INSTRUMENT CLUSTER
(SECTION 0922-1c)
91
HS CAN_L
HS CAN_H
CHECK CONNECTOR
(SECTION 00D-1e)
E F
Y(I) BR(I)
B(I) B(I)
GY(R) G(R) LG(R) R(R) P(R) G(R)
A C-45
AJ AK C-20
S I C-21
G(I) LG(DR1) B/R(DR1) R/B(DR2) G/B(DR2)
0920-307
0920-308
C B
FRONT DOOR SPEAKER (LH)
FRONT DOOR SPEAKER (RH)
ACC RELAY
(SECTION 0920-3b)
107
RELAY AND FUSE BLOCK
(SECTION 0920-3a)
104
0920-303
W D H G A
CD PLAYER
G12

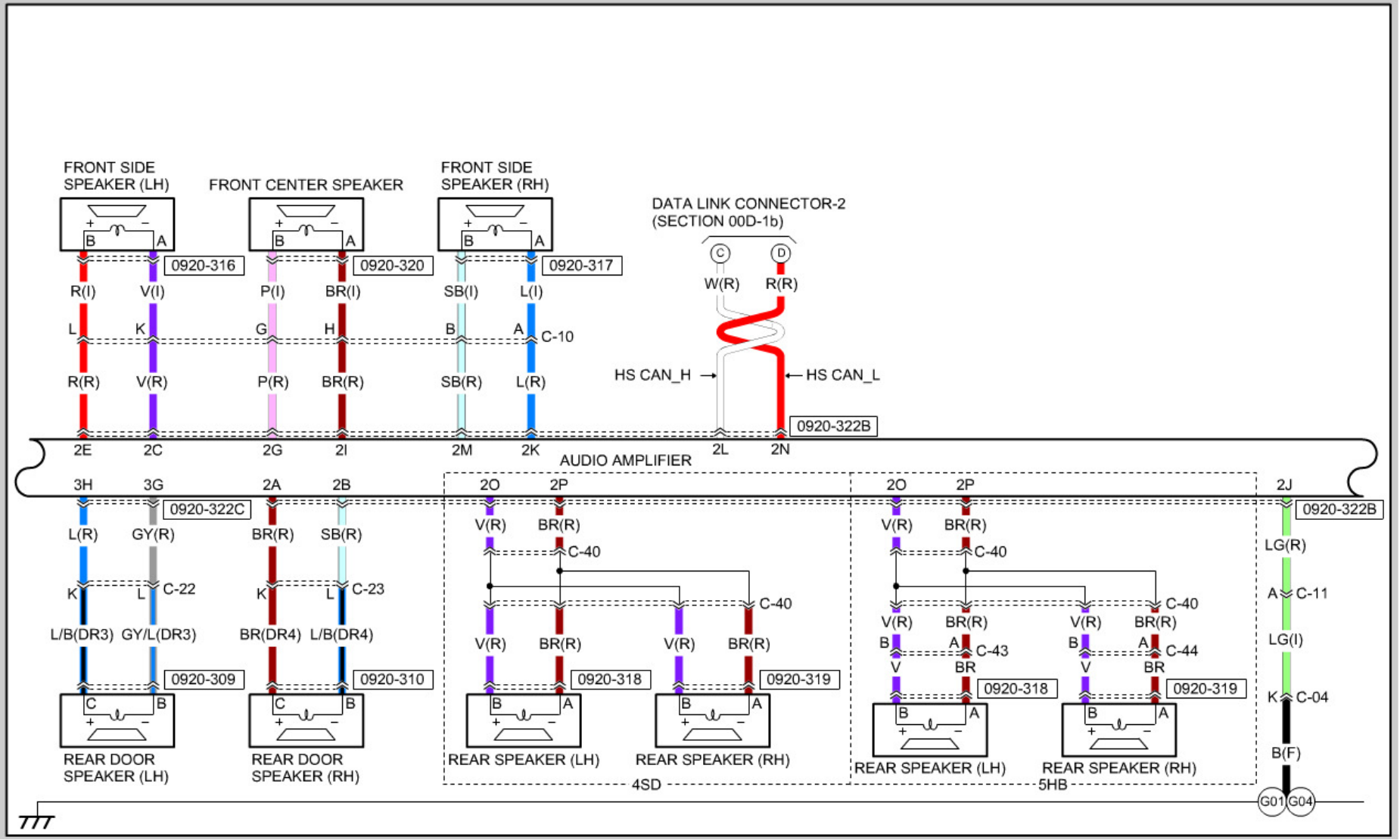
FRONT SIDE SPEAKER (LH)
FRONT CENTER SPEAKER
FRONT SIDE SPEAKER (RH)
DATA LINK CONNECTOR-2 (SECTION 00D-1b)
0920-316
0920-320
0920-317
R(I) V(I) P(I) BR(I) SB(I) L(I)
L K G H B A C-10
R(R) V(R) P(R) BR(R) SB(R) L(R)
W(R) R(R)
HS CAN_H
HS CAN_L
0920-322B
2E 2C 2G 2I 2M 2K 2L 2N
AUDIO AMPLIFIER
3H 3G 2A 2B 2O 2P 2O 2P 2J
0920-322C
L(R) GY(R) BR(R) SB(R) V(R) BR(R) V(R) BR(R) LG(R)
C-40 C-40 C-40 A C-11
K L C-22 K L C-23
L/B(DR3) GY/L(DR3) BR(DR4) L/B(DR4) V(R) BR(R) V(R) BR(R) V(R) BR(R) V(R) BR(R) LG(I)
B A C-43 B A C-44
V BR V BR
0920-309 0920-310 0920-318 0920-319 0920-318 0920-319
K C-04
B(F)
REAR DOOR SPEAKER (LH)
REAR DOOR SPEAKER (RH)
REAR SPEAKER (LH)
REAR SPEAKER (RH)
REAR SPEAKER (LH)
REAR SPEAKER (RH)
4SD
5HB
G01 G04

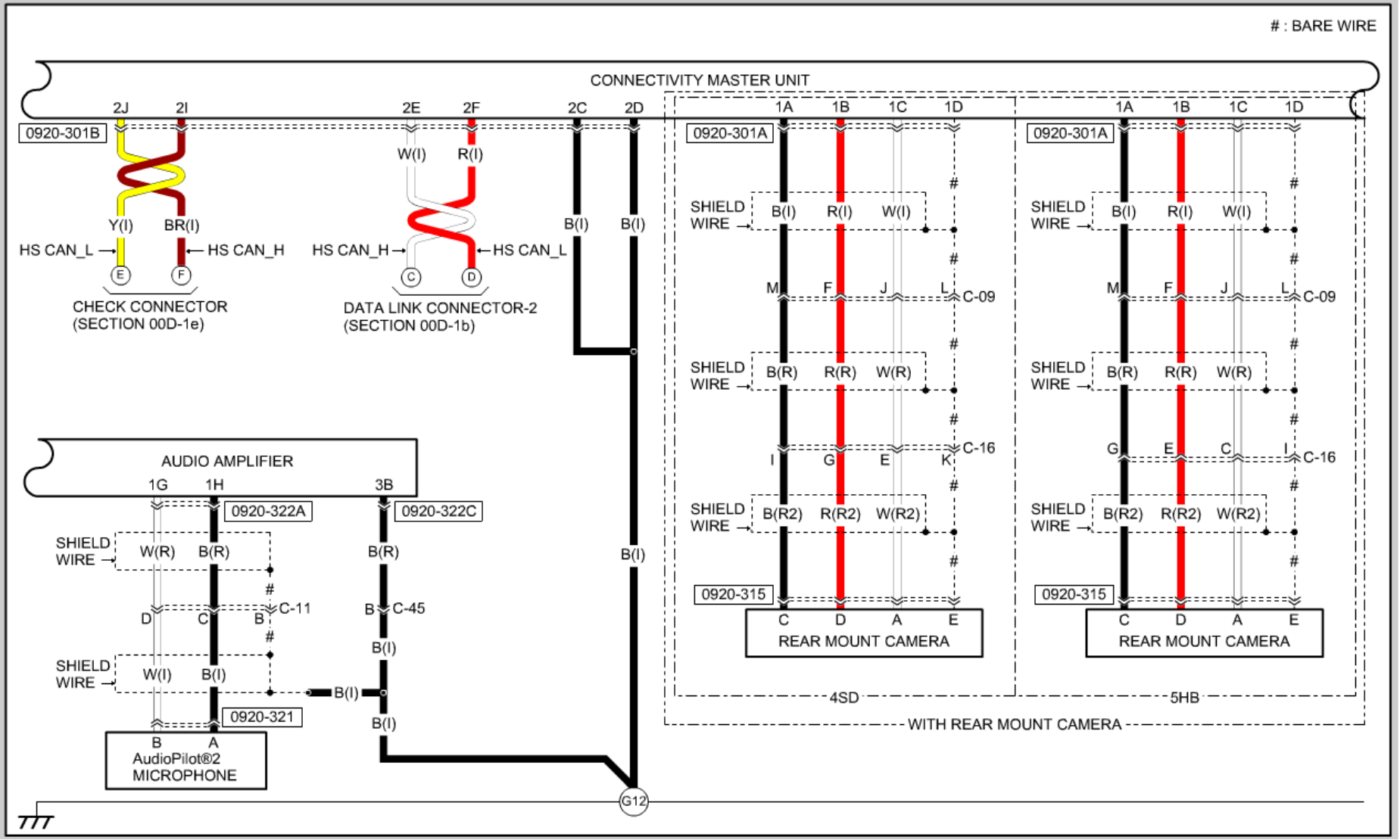
: BARE WIRE
CONNECTIVITY MASTER UNIT
2J
2I
2E
2F
2C
2D
0920-301B
Y(I)
BR(I)
HS CAN_L
HS CAN_H
E
F
CHECK CONNECTOR
(SECTION 00D-1e)
W(I)
R(I)
HS CAN_H
HS CAN_L
C
D
DATA LINK CONNECTOR-2
(SECTION 00D-1b)
B(I)
B(I)
1A
1B
1C
1D
0920-301A
SHIELD WIRE
B(I)
R(I)
W(I)
M
F
J
L
C-09
B(R)
R(R)
W(R)
I
G
E
K
C-16
B(R2)
R(R2)
W(R2)
0920-315
C
D
A
E
REAR MOUNT CAMERA
4SD
5HB
WITH REAR MOUNT CAMERA
AUDIO AMPLIFIER
1G
1H
3B
0920-322A
0920-322C
W(R)
B(R)
D
C
B
C-11
B
C-45
W(I)
B(I)
0920-321
B
A
AudioPilot®2
MICROPHONE
G12

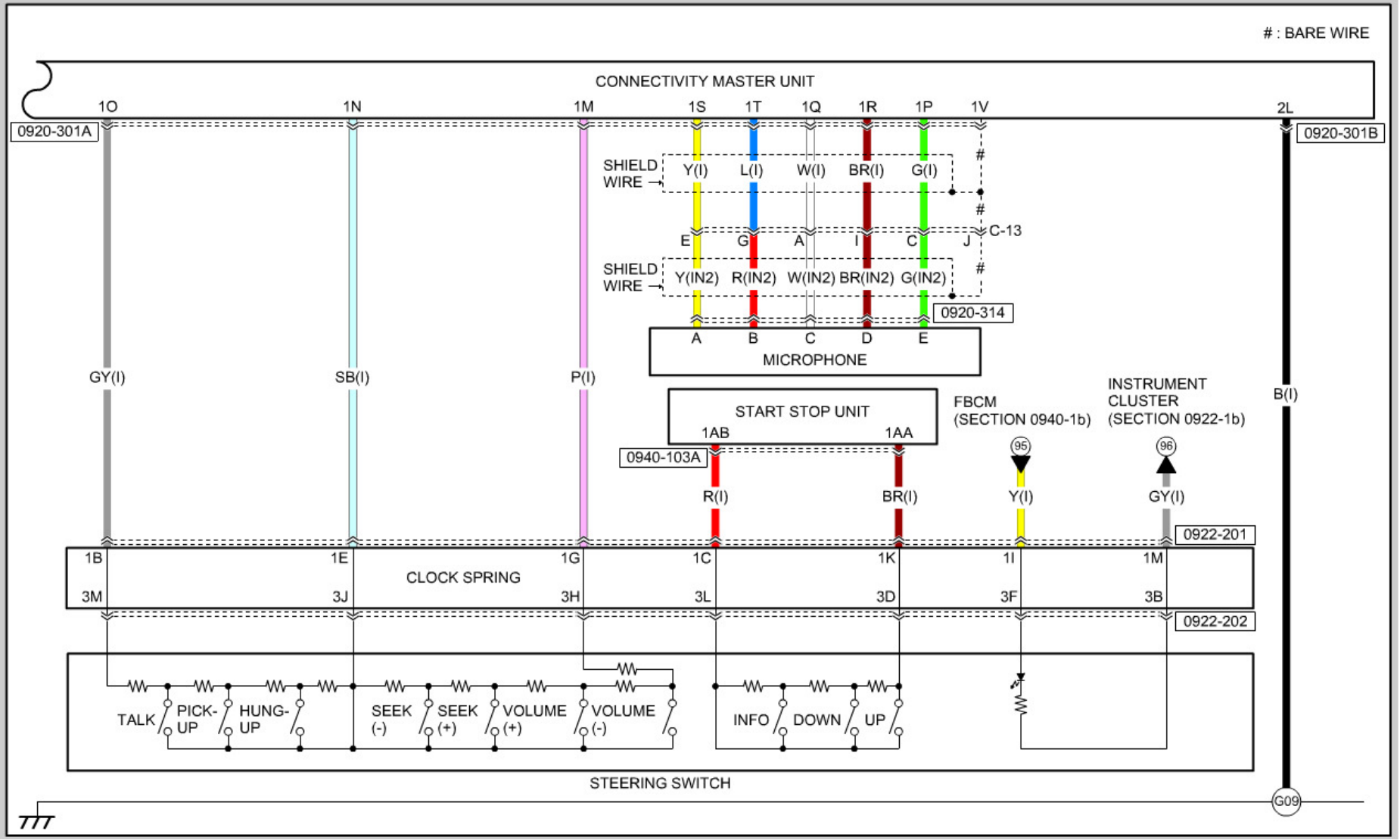
: BARE WIRE
CONNECTIVITY MASTER UNIT
1O
1N
1M
1S
1T
1Q
1R
1P
1V
2L
0920-301A
0920-301B
SHIELD WIRE
Y(I)
L(I)
W(I)
BR(I)
G(I)
#
C-13
E
G
A
I
C
J
Y(IN2)
R(IN2)
W(IN2)
BR(IN2)
G(IN2)
0920-314
A
B
C
D
E
MICROPHONE
GY(I)
SB(I)
P(I)
B(I)
START STOP UNIT
1AB
1AA
0940-103A
FBCM
(SECTION 0940-1b)
INSTRUMENT CLUSTER
(SECTION 0922-1b)
95
96
R(I)
BR(I)
Y(I)
GY(I)
0922-201
1B
1E
1G
1C
1K
1I
1M
CLOCK SPRING
3M
3J
3H
3L
3D
3F
3B
0922-202
TALK
PICK-UP
HUNG-UP
SEEK (-)
SEEK (+)
VOLUME (+)
VOLUME (-)
INFO
DOWN
UP
STEERING SWITCH
G09

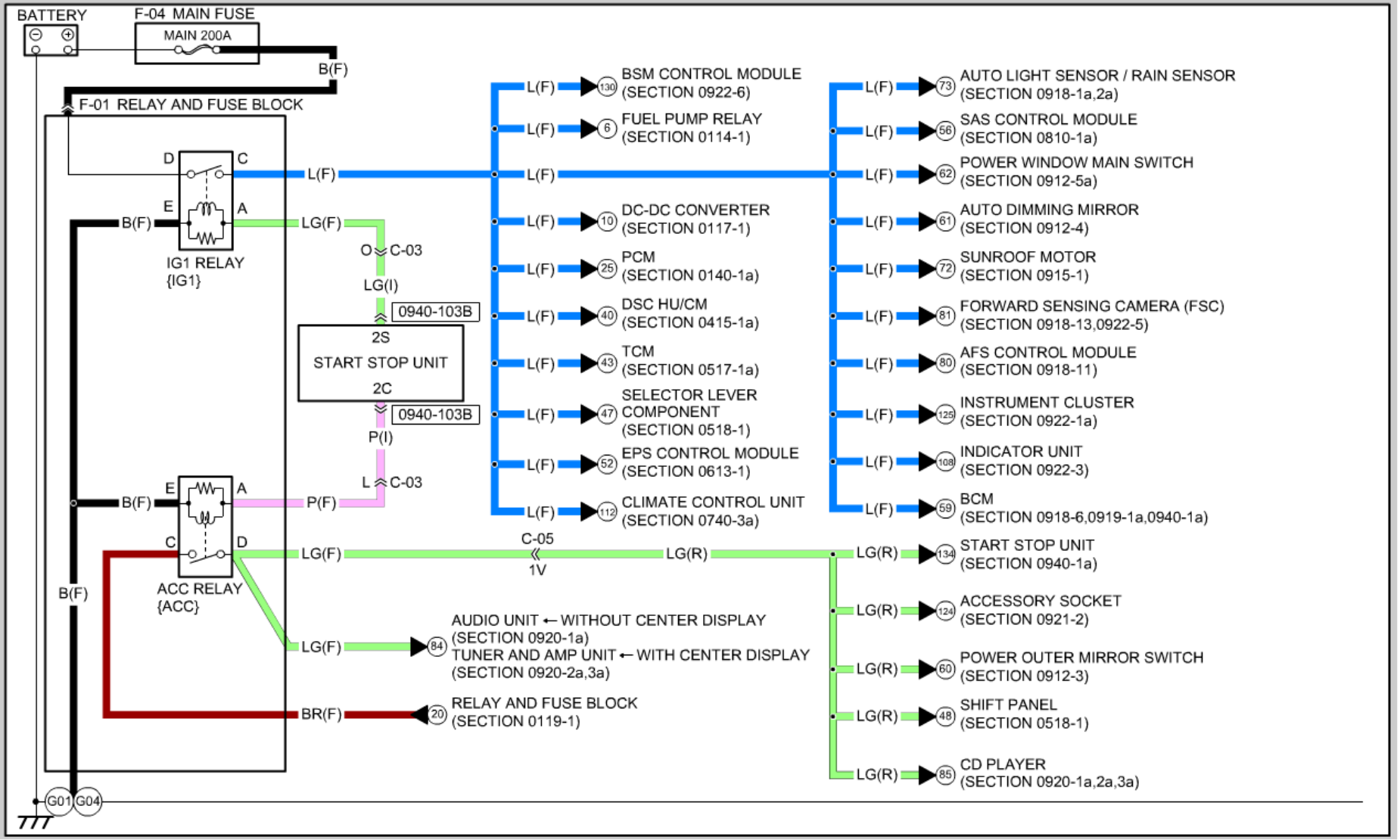
BATTERY
F-04 MAIN FUSE
MAIN 200A
B(F)
F-01 RELAY AND FUSE BLOCK
D
C
E
A
B(F)
IG1 RELAY
{IG1}
L(F)
LG(F)
O C-03
LG(I)
0940-103B
2S
START STOP UNIT
2C
0940-103B
P(I)
L C-03
B(F)
E
A
P(F)
C
D
ACC RELAY
{ACC}
LG(F)
B(F)
LG(F)
84
BR(F)
20
RELAY AND FUSE BLOCK
(SECTION 0119-1)
AUDIO UNIT ← WITHOUT CENTER DISPLAY
(SECTION 0920-1a)
TUNER AND AMP UNIT ← WITH CENTER DISPLAY
(SECTION 0920-2a,3a)
L(F)
130
BSM CONTROL MODULE
(SECTION 0922-6)
L(F)
6
FUEL PUMP RELAY
(SECTION 0114-1)
L(F)
L(F)
10
DC-DC CONVERTER
(SECTION 0117-1)
L(F)
25
PCM
(SECTION 0140-1a)
L(F)
40
DSC HU/CM
(SECTION 0415-1a)
L(F)
43
TCM
(SECTION 0517-1a)
L(F)
47
SELECTOR LEVER
COMPONENT
(SECTION 0518-1)
L(F)
52
EPS CONTROL MODULE
(SECTION 0613-1)
L(F)
112
CLIMATE CONTROL UNIT
(SECTION 0740-3a)
C-05
1V
LG(R)
L(F)
73
AUTO LIGHT SENSOR / RAIN SENSOR
(SECTION 0918-1a,2a)
L(F)
56
SAS CONTROL MODULE
(SECTION 0810-1a)
L(F)
62
POWER WINDOW MAIN SWITCH
(SECTION 0912-5a)
L(F)
61
AUTO DIMMING MIRROR
(SECTION 0912-4)
L(F)
72
SUNROOF MOTOR
(SECTION 0915-1)
L(F)
81
FORWARD SENSING CAMERA (FSC)
(SECTION 0918-13,0922-5)
L(F)
80
AFS CONTROL MODULE
(SECTION 0918-11)
L(F)
125
INSTRUMENT CLUSTER
(SECTION 0922-1a)
L(F)
108
INDICATOR UNIT
(SECTION 0922-3)
L(F)
59
BCM
(SECTION 0918-6,0919-1a,0940-1a)
LG(R)
134
START STOP UNIT
(SECTION 0940-1a)
LG(R)
124
ACCESSORY SOCKET
(SECTION 0921-2)
LG(R)
60
POWER OUTER MIRROR SWITCH
(SECTION 0912-3)
LG(R)
48
SHIFT PANEL
(SECTION 0518-1)
LG(R)
85
CD PLAYER
(SECTION 0920-1a,2a,3a)
G01
G04

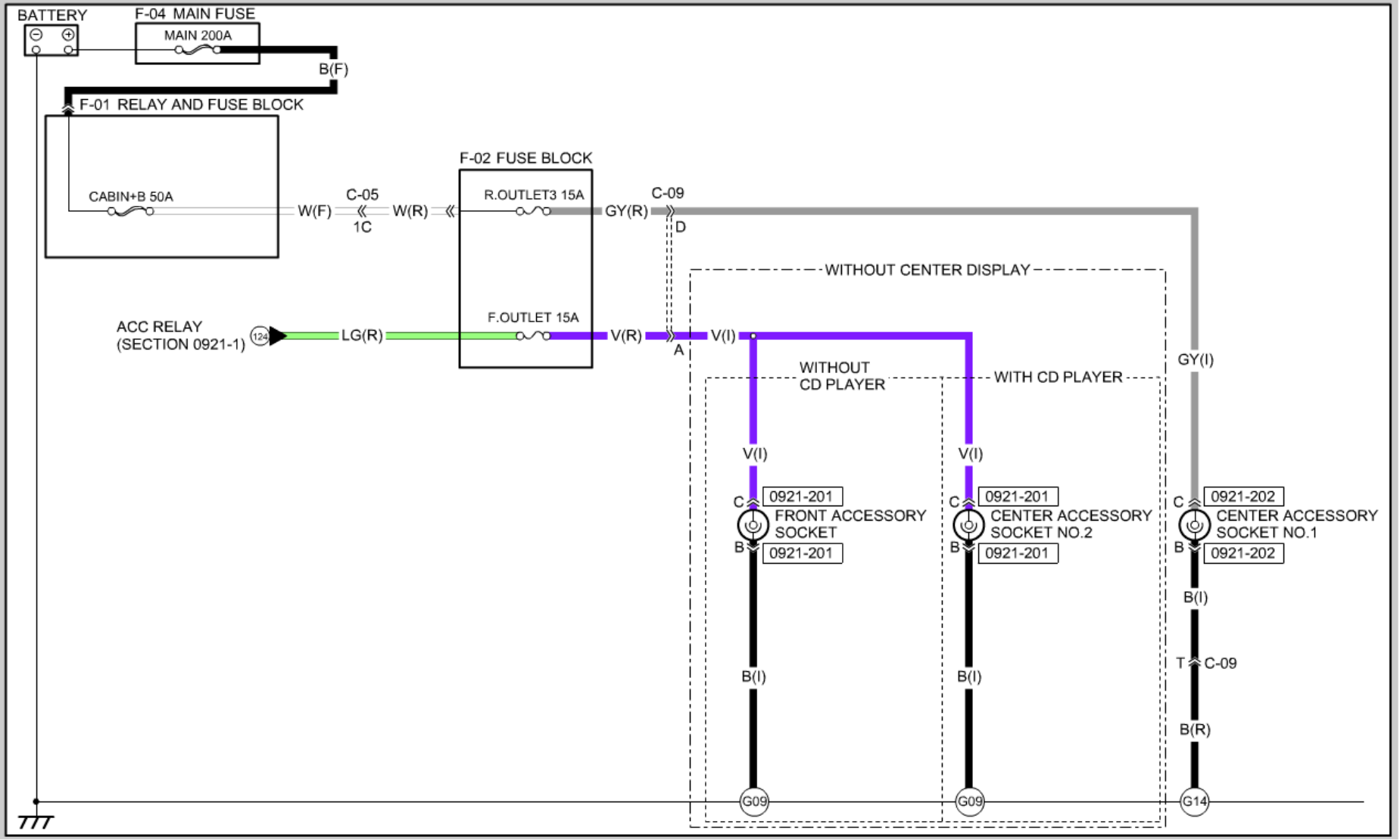
BATTERY
F-04 MAIN FUSE
MAIN 200A
B(F)
F-01 RELAY AND FUSE BLOCK
CABIN+B 50A
W(F)
C-05
1C
W(R)
F-02 FUSE BLOCK
R.OUTLET3 15A
GY(R)
C-09
D
ACC RELAY
(SECTION 0921-1)
124
LG(R)
F.OUTLET 15A
V(R)
A
V(I)
WITHOUT CENTER DISPLAY
WITHOUT
CD PLAYER
WITH CD PLAYER
GY(I)
V(I)
V(I)
C
0921-201
FRONT ACCESSORY
SOCKET
B
0921-201
C
0921-201
CENTER ACCESSORY
SOCKET NO.2
B
0921-201
C
0921-202
CENTER ACCESSORY
SOCKET NO.1
B
0921-202
B(I)
T
C-09
B(R)
B(I)
B(I)
G09
G09
G14

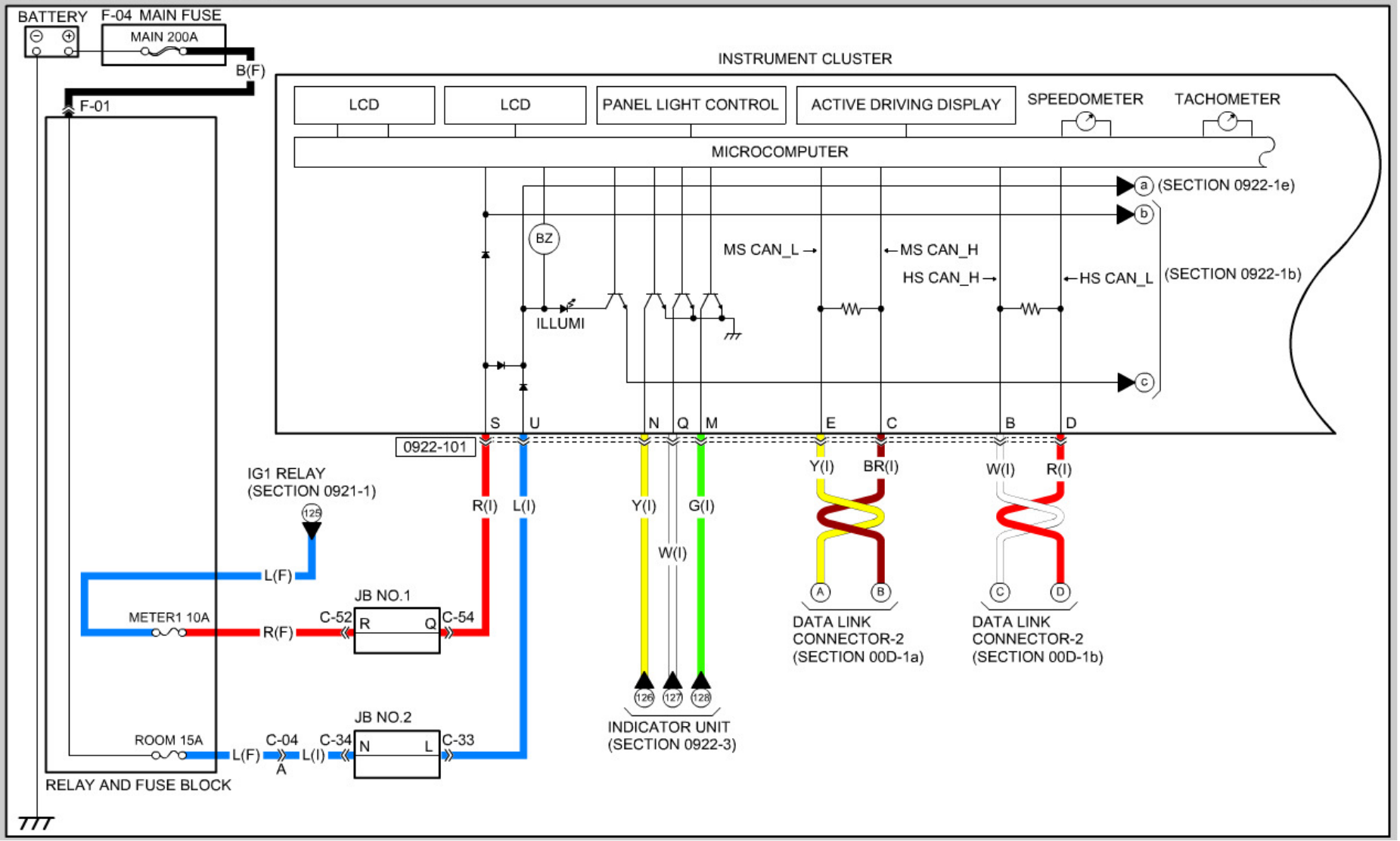
BATTERY
F-04 MAIN FUSE
MAIN 200A
B(F)
F-01
INSTRUMENT CLUSTER
LCD
LCD
PANEL LIGHT CONTROL
ACTIVE DRIVING DISPLAY
SPEEDOMETER
TACHOMETER
MICROCOMPUTER
a (SECTION 0922-1e)
b
c
(SECTION 0922-1b)
BZ
MS CAN_L
MS CAN_H
HS CAN_H
HS CAN_L
ILLUMI
S
U
N
Q
M
E
C
B
D
0922-101
IG1 RELAY
(SECTION 0921-1)
125
R(I)
L(I)
Y(I)
G(I)
W(I)
Y(I)
BR(I)
W(I)
R(I)
L(F)
JB NO.1
METER1 10A
R(F)
C-52
R
Q
C-54
A
B
C
D
DATA LINK
CONNECTOR-2
(SECTION 00D-1a)
DATA LINK
CONNECTOR-2
(SECTION 00D-1b)
126
127
128
INDICATOR UNIT
(SECTION 0922-3)
JB NO.2
ROOM 15A
C-04
C-34
N
L
C-33
L(F)
L(I)
A
RELAY AND FUSE BLOCK

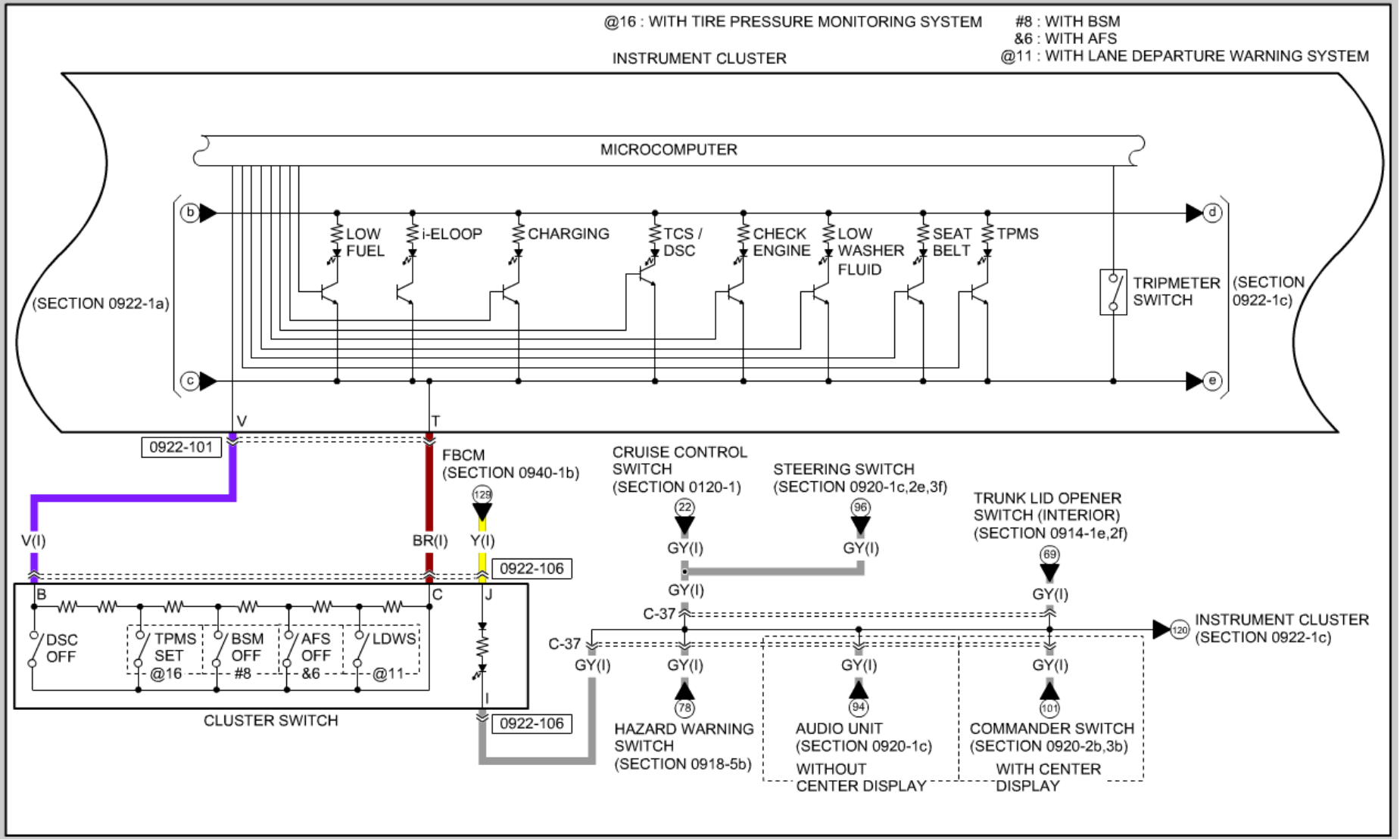
@16 : WITH TIRE PRESSURE MONITORING SYSTEM
#8 : WITH BSM
&6 : WITH AFS
@11 : WITH LANE DEPARTURE WARNING SYSTEM
INSTRUMENT CLUSTER
MICROCOMPUTER
(SECTION 0922-1a)
LOW FUEL
i-ELOOP
CHARGING
TCS / DSC
CHECK ENGINE
LOW WASHER FLUID
SEAT BELT
TPMS
TRIPMETER SWITCH
(SECTION 0922-1c)
V
T
0922-101
FBCM (SECTION 0940-1b)
CRUISE CONTROL SWITCH (SECTION 0120-1)
STEERING SWITCH (SECTION 0920-1c,2e,3f)
TRUNK LID OPENER SWITCH (INTERIOR) (SECTION 0914-1e,2f)
V(I)
BR(I)
Y(I)
0922-106
GY(I)
C-37
INSTRUMENT CLUSTER (SECTION 0922-1c)
DSC OFF
TPMS SET @16
BSM OFF #8
AFS OFF &6
LDWS @11
CLUSTER SWITCH
HAZARD WARNING SWITCH (SECTION 0918-5b)
AUDIO UNIT (SECTION 0920-1c)
WITHOUT CENTER DISPLAY
COMMANDER SWITCH (SECTION 0920-2b,3b)
WITH CENTER DISPLAY

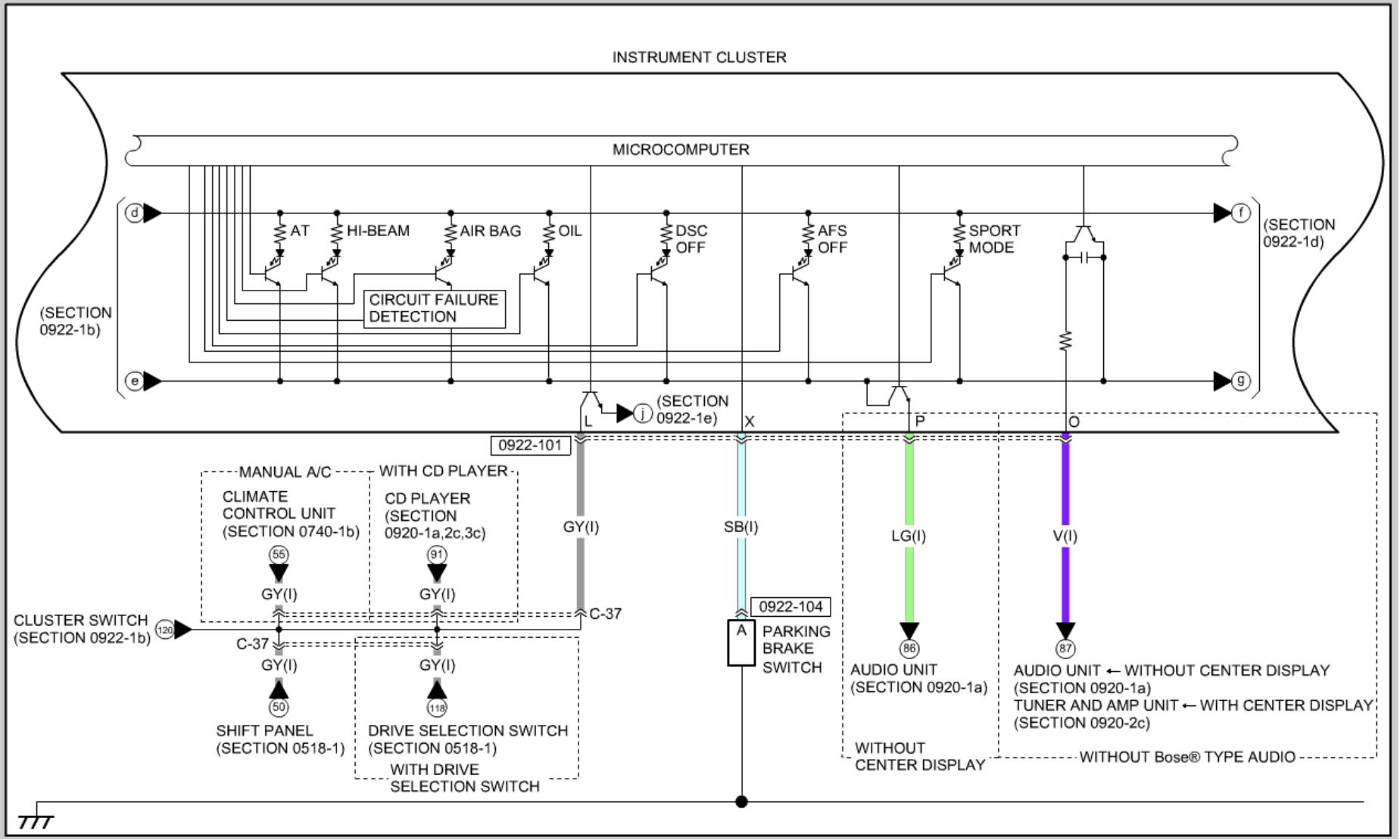
INSTRUMENT CLUSTER
MICROCOMPUTER
AT
HI-BEAM
AIR BAG
OIL
DSC OFF
AFS OFF
SPORT MODE
CIRCUIT FAILURE DETECTION
(SECTION 0922-1b)
(SECTION 0922-1d)
(SECTION 0922-1e)
0922-101
MANUAL A/C
WITH CD PLAYER
CLIMATE CONTROL UNIT (SECTION 0740-1b)
CD PLAYER (SECTION 0920-1a,2c,3c)
GY(I)
SB(I)
LG(I)
V(I)
C-37
0922-104
PARKING BRAKE SWITCH
CLUSTER SWITCH (SECTION 0922-1b)
SHIFT PANEL (SECTION 0518-1)
DRIVE SELECTION SWITCH (SECTION 0518-1)
WITH DRIVE SELECTION SWITCH
AUDIO UNIT (SECTION 0920-1a)
AUDIO UNIT ← WITHOUT CENTER DISPLAY (SECTION 0920-1a)
TUNER AND AMP UNIT ← WITH CENTER DISPLAY (SECTION 0920-2c)
WITHOUT CENTER DISPLAY
WITHOUT Bose® TYPE AUDIO

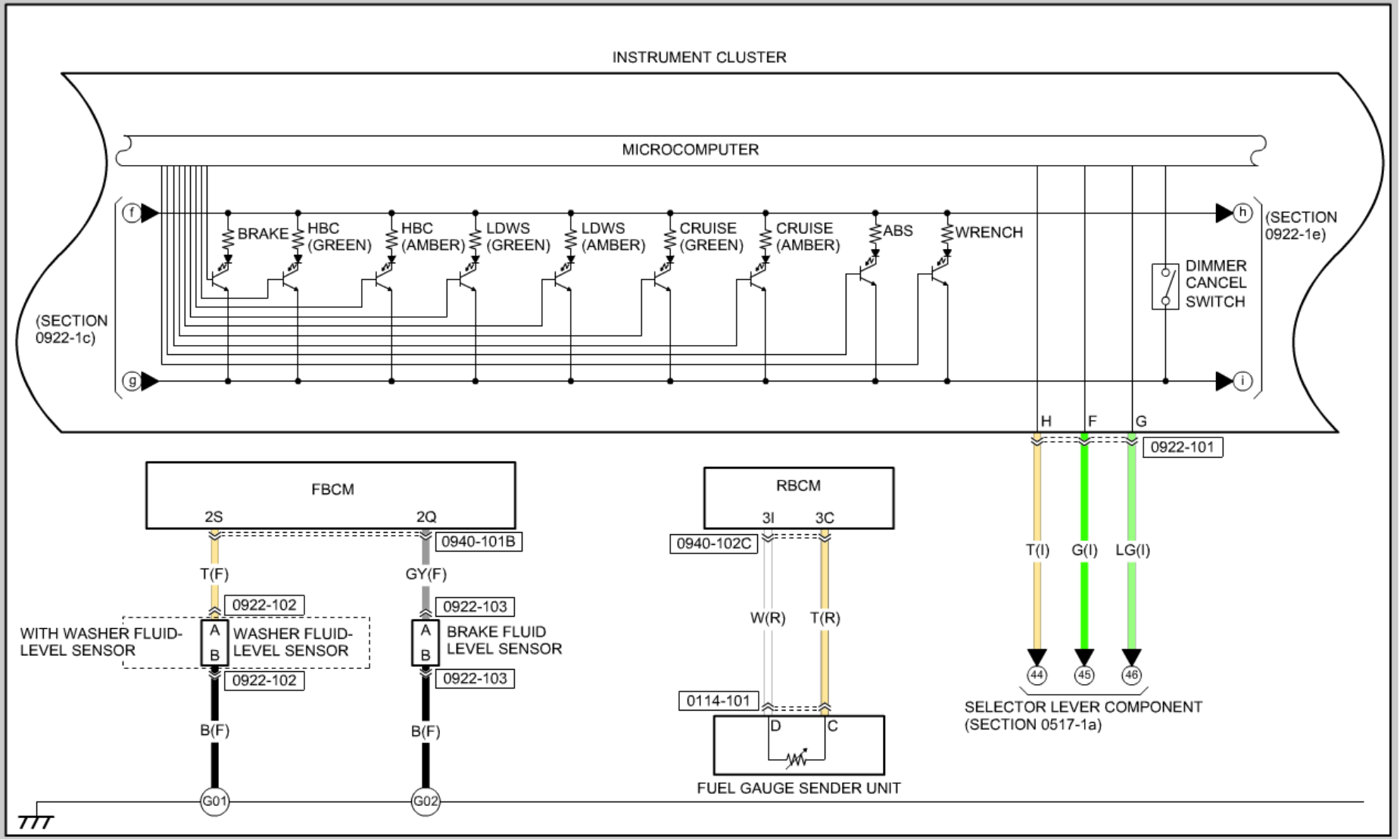
INSTRUMENT CLUSTER
MICROCOMPUTER
BRAKE
HBC (GREEN)
HBC (AMBER)
LDWS (GREEN)
LDWS (AMBER)
CRUISE (GREEN)
CRUISE (AMBER)
ABS
WRENCH
DIMMER CANCEL SWITCH
(SECTION 0922-1c)
(SECTION 0922-1e)
f
g
h
i
H
F
G
0922-101
FBCM
2S
2Q
0940-101B
T(F)
GY(F)
0922-102
0922-103
WITH WASHER FLUID-LEVEL SENSOR
WASHER FLUID-LEVEL SENSOR
BRAKE FLUID LEVEL SENSOR
A
B
B(F)
G01
G02
RBCM
3I
3C
0940-102C
W(R)
T(R)
0114-101
D
C
FUEL GAUGE SENDER UNIT
T(I)
G(I)
LG(I)
44
45
46
SELECTOR LEVER COMPONENT (SECTION 0517-1a)

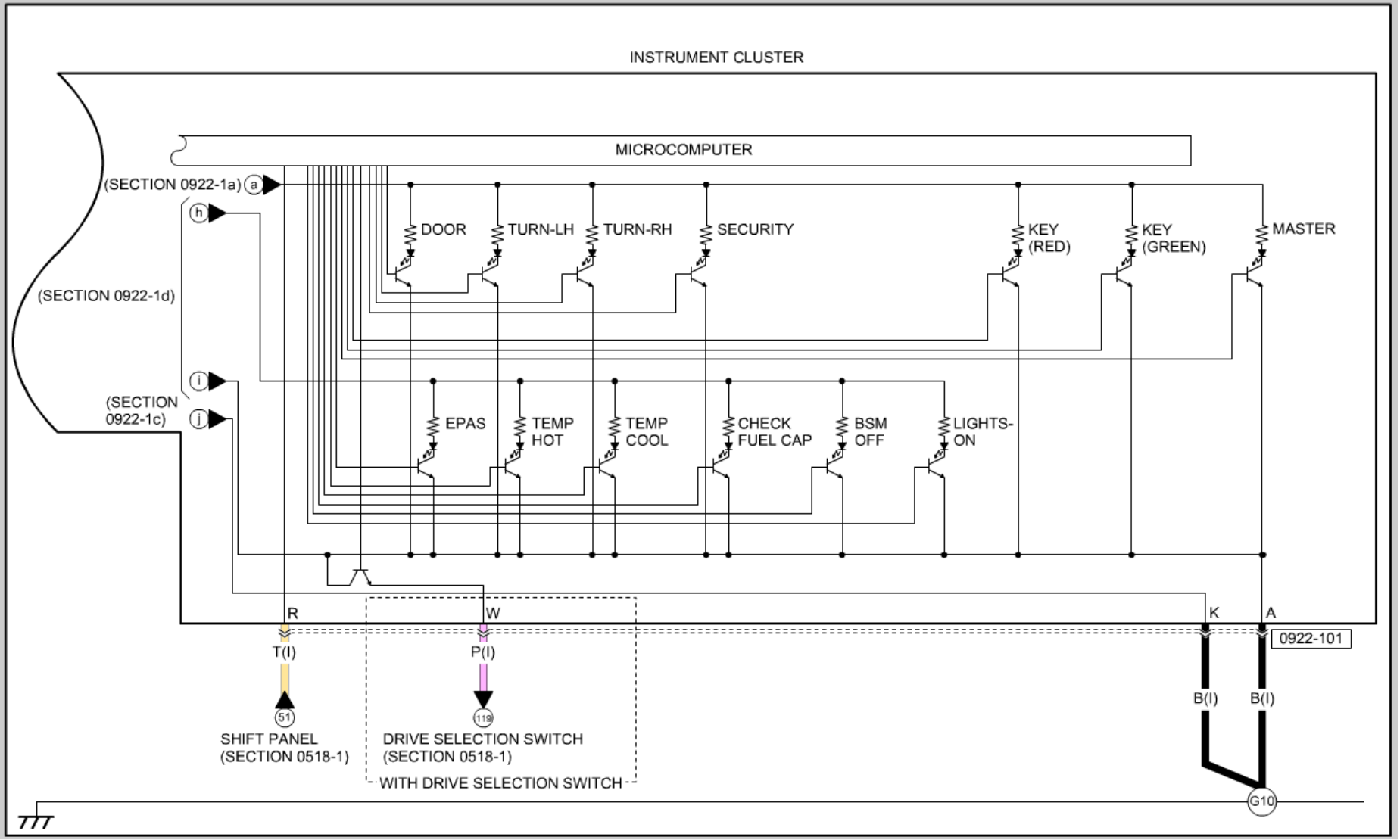
INSTRUMENT CLUSTER
MICROCOMPUTER
(SECTION 0922-1a)
a
h
(SECTION 0922-1d)
i
(SECTION 0922-1c)
j
DOOR
TURN-LH
TURN-RH
SECURITY
KEY (RED)
KEY (GREEN)
MASTER
EPAS
TEMP HOT
TEMP COOL
CHECK FUEL CAP
BSM OFF
LIGHTS-ON
R
W
K
A
0922-101
T(I)
P(I)
51
119
B(I)
B(I)
SHIFT PANEL (SECTION 0518-1)
DRIVE SELECTION SWITCH (SECTION 0518-1)
WITH DRIVE SELECTION SWITCH
G10

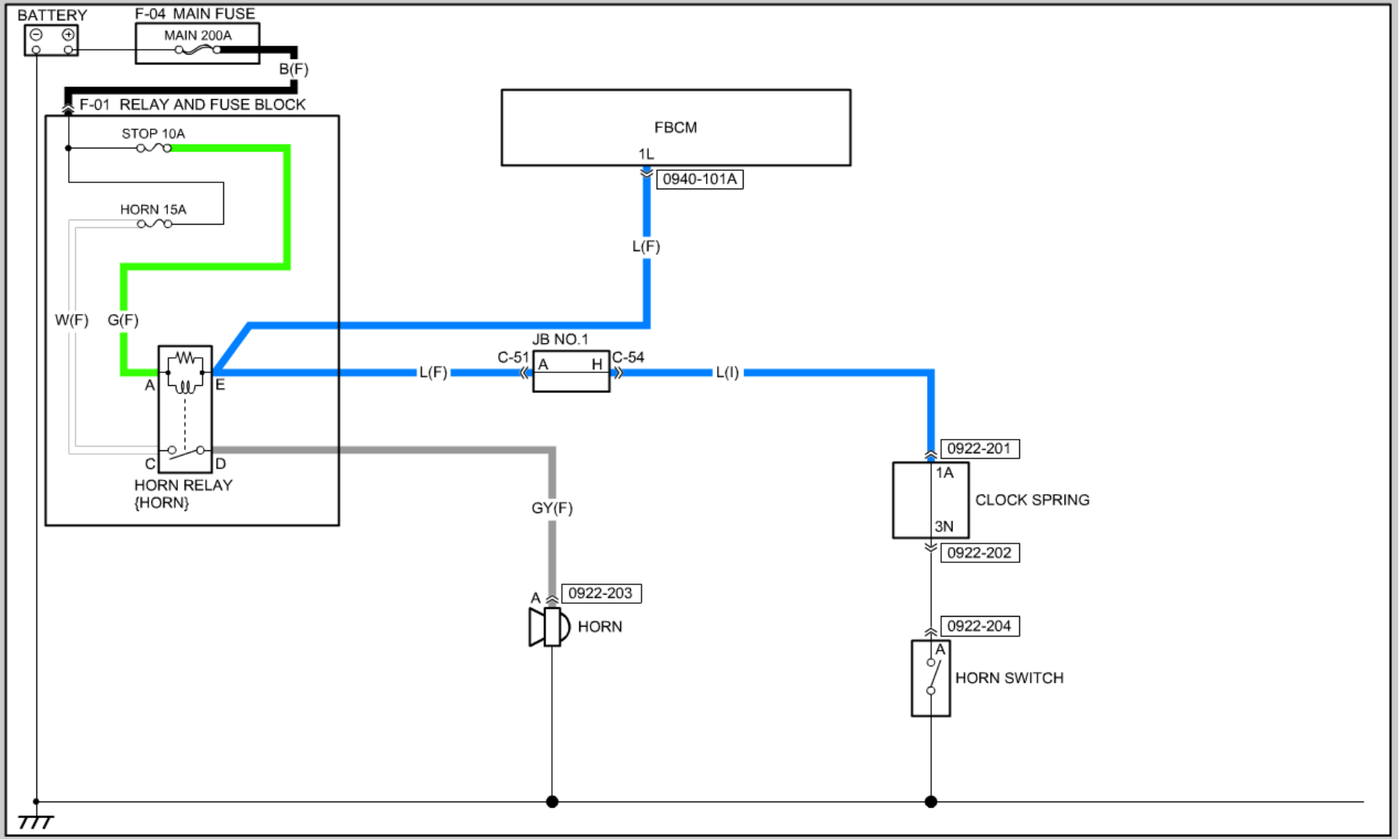
BATTERY
F-04 MAIN FUSE
MAIN 200A
B(F)
F-01 RELAY AND FUSE BLOCK
STOP 10A
HORN 15A
W(F)
G(F)
A
E
C
D
HORN RELAY
{HORN}
FBCM
1L
0940-101A
L(F)
JB NO.1
C-51
A
H
C-54
L(F)
L(I)
GY(F)
A
0922-203
HORN
0922-201
1A
CLOCK SPRING
3N
0922-202
0922-204
A
HORN SWITCH

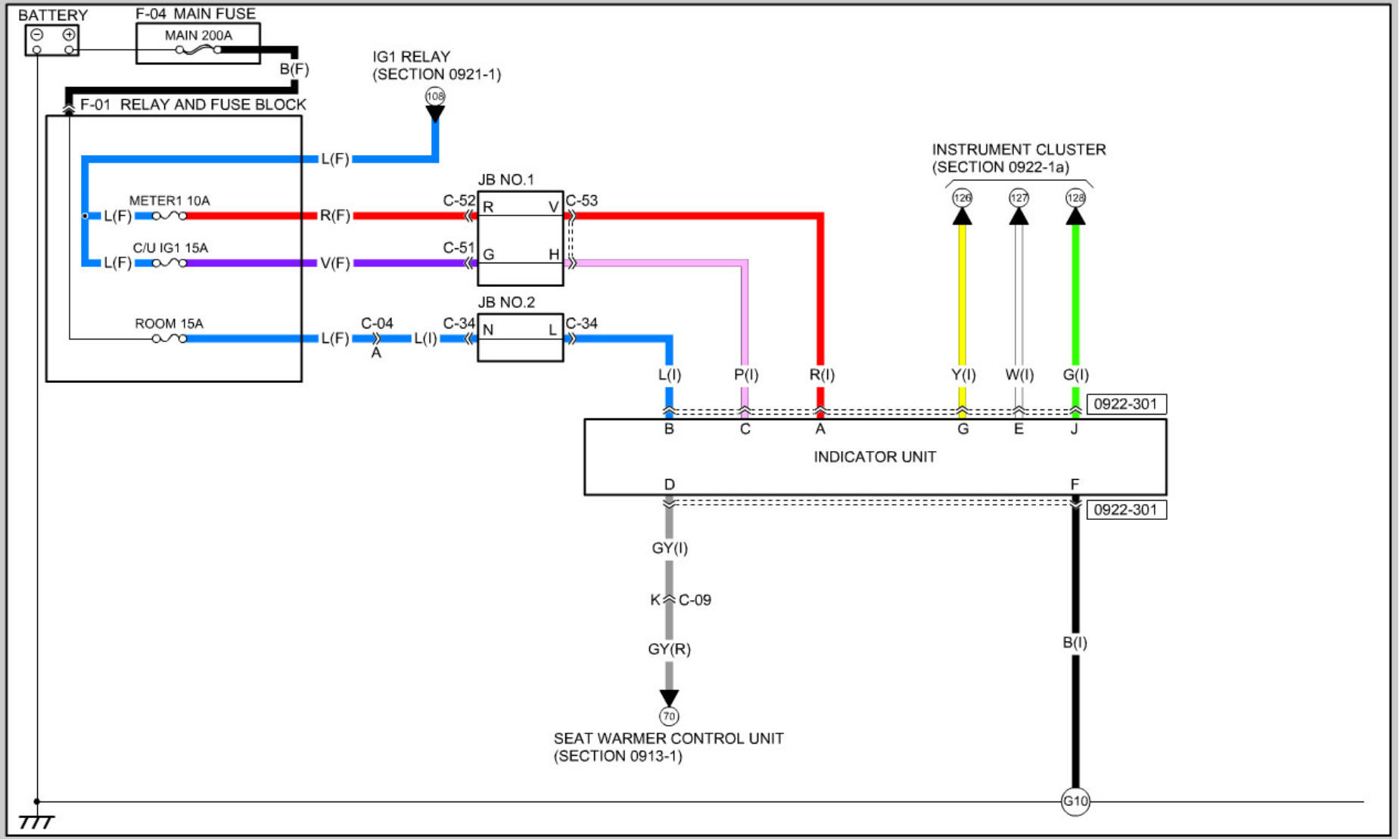
BATTERY
F-04 MAIN FUSE
MAIN 200A
B(F)
IG1 RELAY
(SECTION 0921-1)
108
F-01 RELAY AND FUSE BLOCK
L(F)
METER1 10A
L(F)
R(F)
C/U IG1 15A
L(F)
V(F)
ROOM 15A
L(F)
C-04
A
L(I)
JB NO.1
C-52
R
V
C-53
C-51
G
H
JB NO.2
C-34
N
L
C-34
INSTRUMENT CLUSTER
(SECTION 0922-1a)
126
127
128
L(I)
P(I)
R(I)
Y(I)
W(I)
G(I)
0922-301
B
C
A
G
E
J
INDICATOR UNIT
D
F
0922-301
GY(I)
K
C-09
GY(R)
70
SEAT WARMER CONTROL UNIT
(SECTION 0913-1)
B(I)
G10

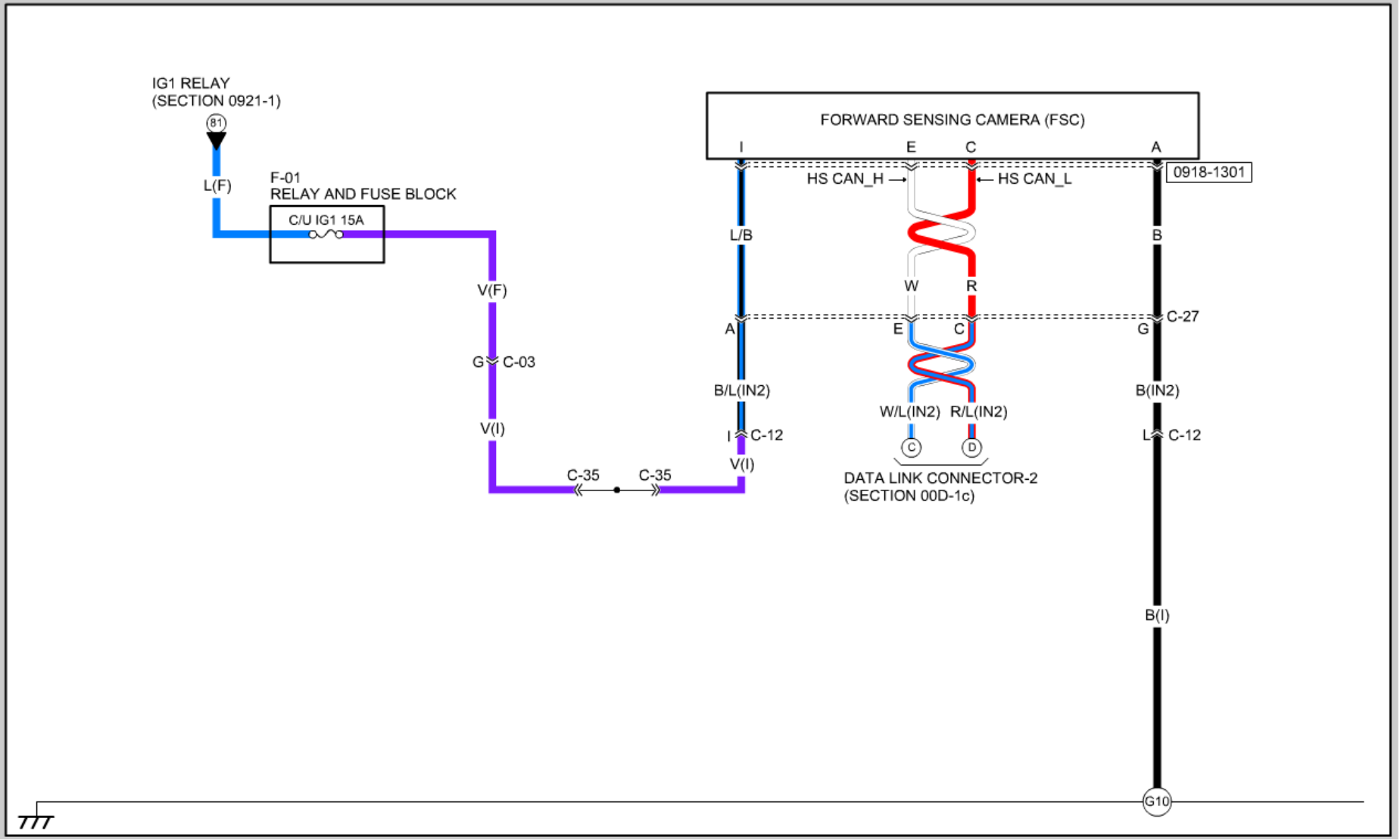
IG1 RELAY
(SECTION 0921-1)
81
L(F)
F-01
RELAY AND FUSE BLOCK
C/U IG1 15A
V(F)
G
C-03
V(I)
C-35
C-35
FORWARD SENSING CAMERA (FSC)
I
E
C
A
HS CAN_H
HS CAN_L
0918-1301
L/B
B
W
R
A
E
C
G
C-27
B/L(IN2)
B(IN2)
W/L(IN2)
R/L(IN2)
I
C-12
V(I)
L
C-12
C
D
DATA LINK CONNECTOR-2
(SECTION 00D-1c)
B(I)
G10

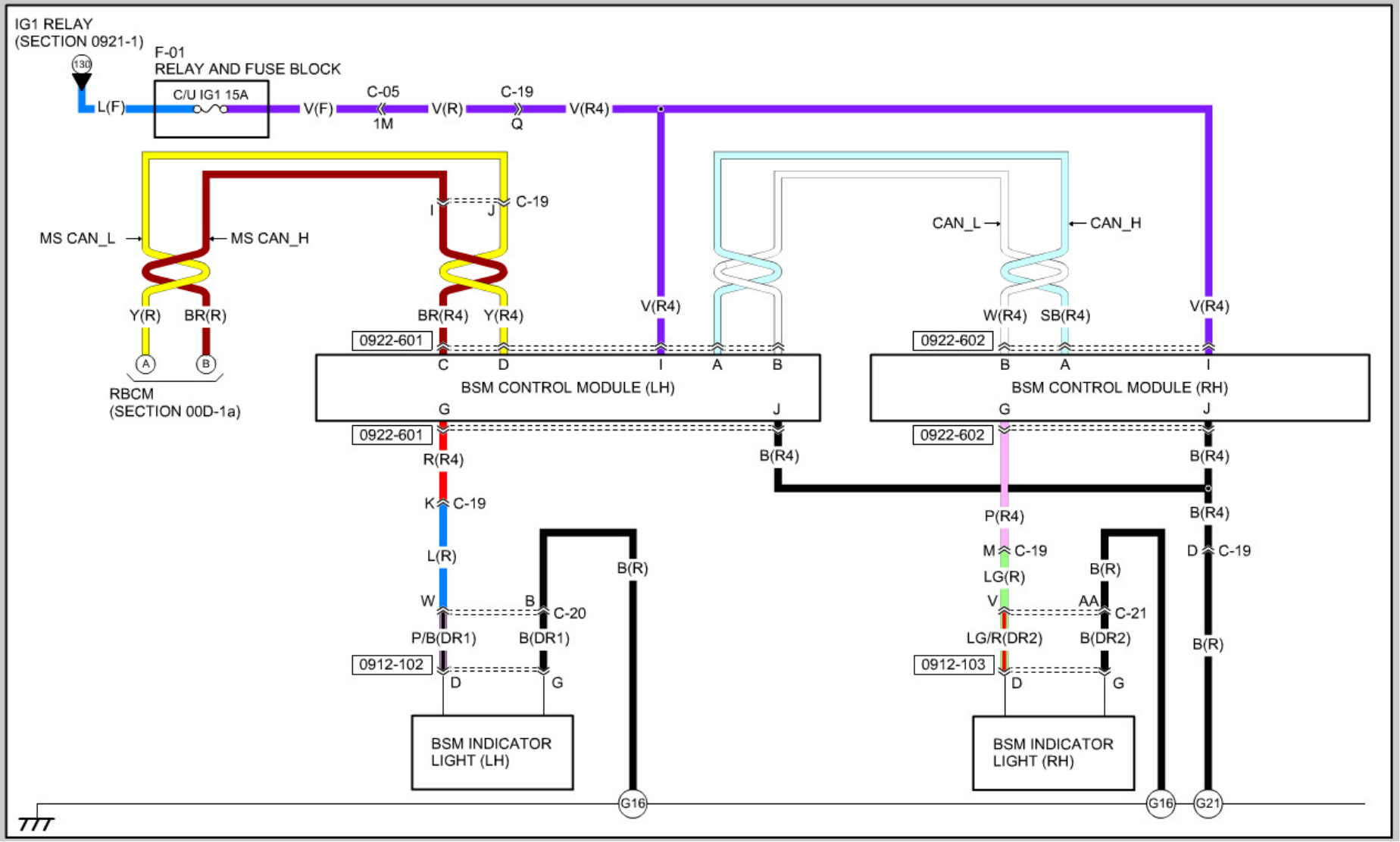
IG1 RELAY
(SECTION 0921-1)
130
L(F)
F-01
RELAY AND FUSE BLOCK
C/U IG1 15A
V(F)
C-05
1M
V(R)
C-19
Q
V(R4)
MS CAN_L
MS CAN_H
I
J
C-19
Y(R)
BR(R)
A
B
RBCM
(SECTION 00D-1a)
BR(R4)
Y(R4)
V(R4)
CAN_L
CAN_H
W(R4)
SB(R4)
V(R4)
0922-601
C
D
I
A
B
BSM CONTROL MODULE (LH)
0922-602
B
A
I
BSM CONTROL MODULE (RH)
G
J
0922-601
R(R4)
B(R4)
0922-602
B(R4)
K
C-19
L(R)
W
B
C-20
P/B(DR1)
B(DR1)
0912-102
D
G
B(R)
BSM INDICATOR
LIGHT (LH)
G16
P(R4)
M
C-19
LG(R)
V
AA
C-21
LG/R(DR2)
B(DR2)
0912-103
D
G
B(R)
BSM INDICATOR
LIGHT (RH)
G16
B(R4)
D
C-19
B(R)
G21

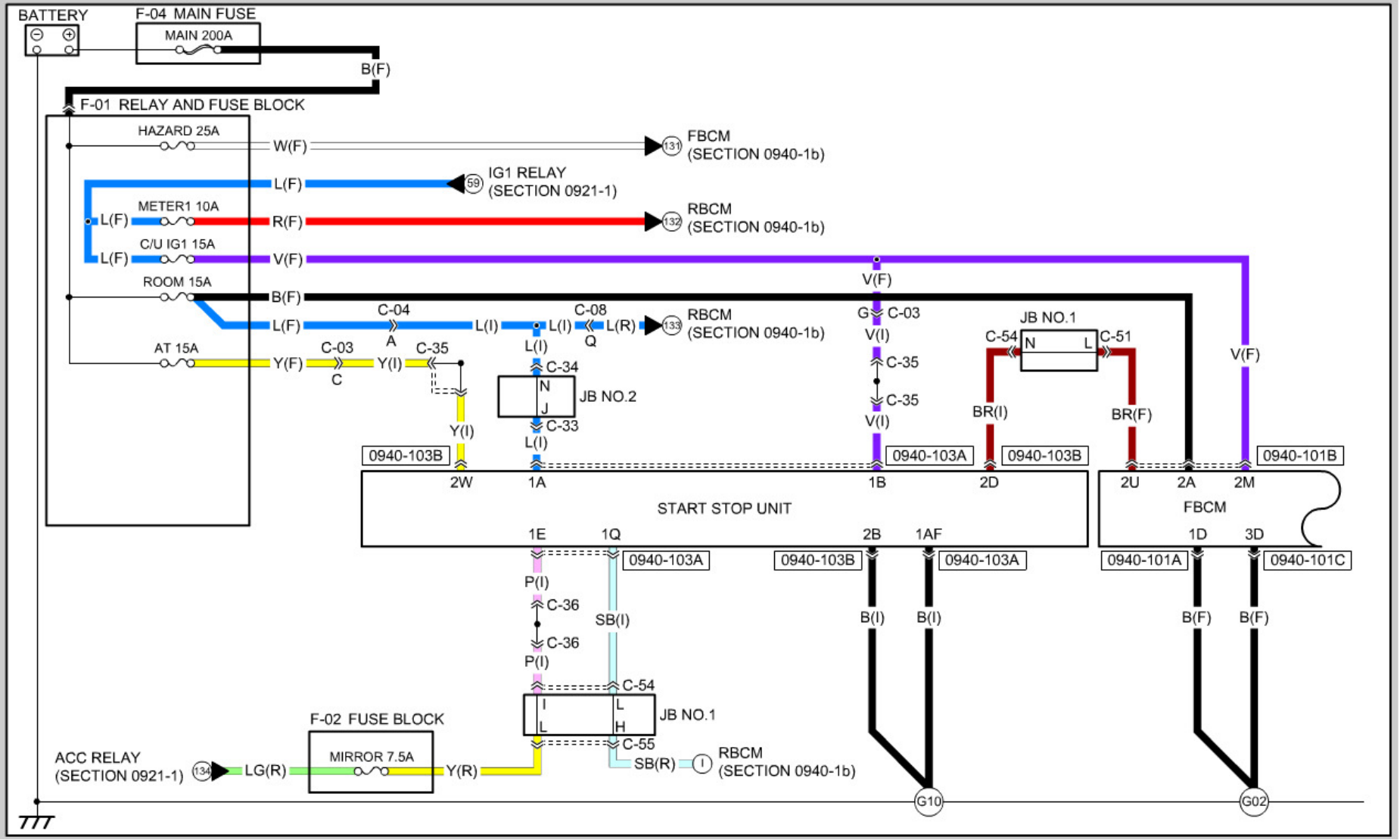
BATTERY
F-04 MAIN FUSE
MAIN 200A
B(F)
F-01 RELAY AND FUSE BLOCK
HAZARD 25A
W(F)
FBCM
(SECTION 0940-1b)
L(F)
IG1 RELAY
(SECTION 0921-1)
METER1 10A
R(F)
RBCM
(SECTION 0940-1b)
C/U IG1 15A
V(F)
ROOM 15A
B(F)
C-04
L(I)
C-08
L(R)
RBCM
(SECTION 0940-1b)
AT 15A
Y(F)
C-03
Y(I)
C-35
C-34
JB NO.2
C-33
JB NO.1
C-54
C-51
BR(I)
BR(F)
0940-103B
0940-103A
0940-101B
2W
1A
1B
2D
2U
2A
2M
START STOP UNIT
FBCM
1E
1Q
2B
1AF
1D
3D
0940-101A
0940-101C
P(I)
C-36
SB(I)
B(I)
B(F)
C-54
C-55
SB(R)
RBCM
(SECTION 0940-1b)
F-02 FUSE BLOCK
MIRROR 7.5A
ACC RELAY
(SECTION 0921-1)
LG(R)
Y(R)
G10
G02

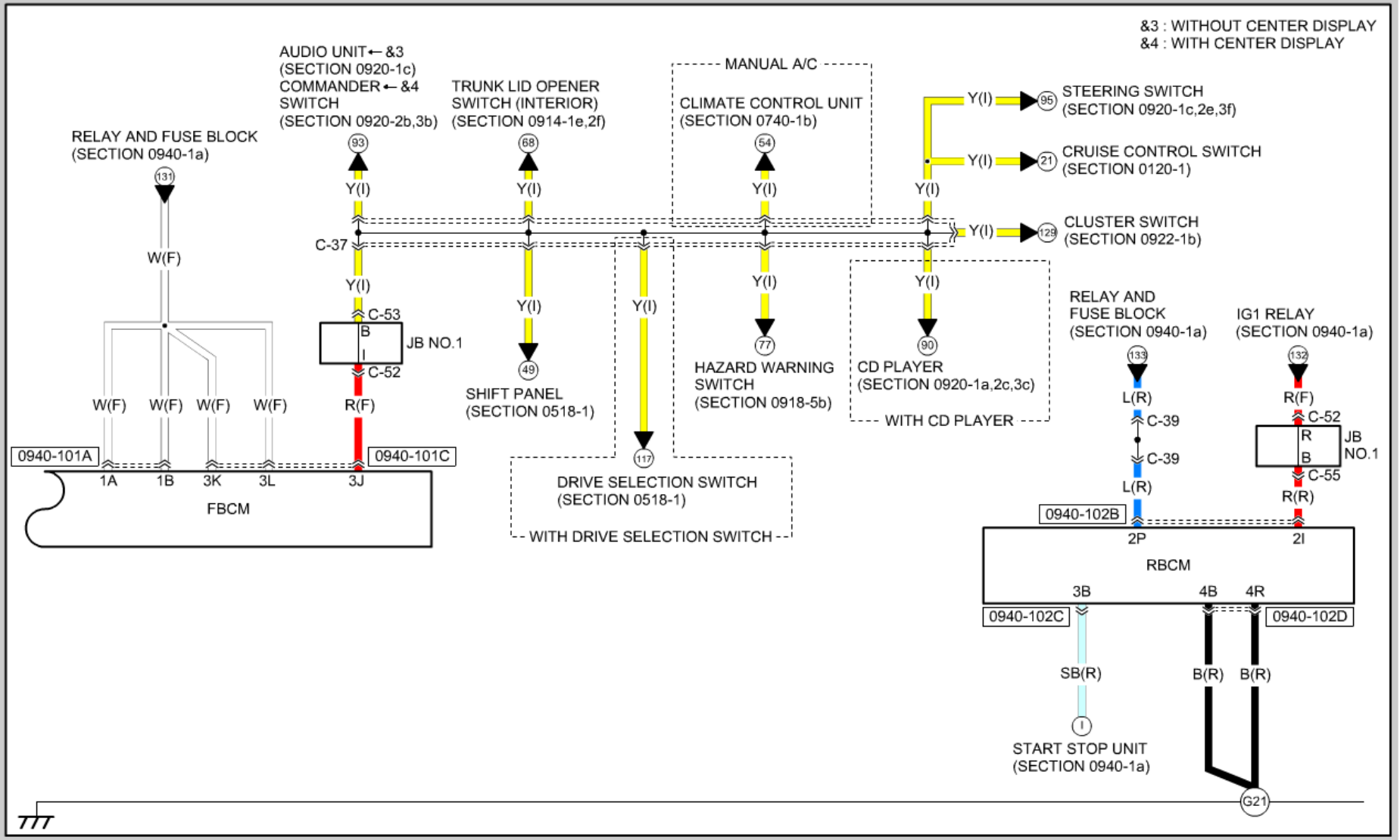
&3 : WITHOUT CENTER DISPLAY
&4 : WITH CENTER DISPLAY
RELAY AND FUSE BLOCK (SECTION 0940-1a)
131
W(F)
W(F) W(F) W(F) W(F)
0940-101A
1A 1B 3K 3L
FBCM
AUDIO UNIT ← &3 (SECTION 0920-1c) COMMANDER ← &4 SWITCH (SECTION 0920-2b,3b)
93
Y(I)
C-37
Y(I)
C-53
B
I
JB NO.1
C-52
R(F)
0940-101C
3J
TRUNK LID OPENER SWITCH (INTERIOR) (SECTION 0914-1e,2f)
68
Y(I)
Y(I)
49
SHIFT PANEL (SECTION 0518-1)
Y(I)
117
DRIVE SELECTION SWITCH (SECTION 0518-1)
WITH DRIVE SELECTION SWITCH
MANUAL A/C
CLIMATE CONTROL UNIT (SECTION 0740-1b)
54
Y(I)
Y(I)
77
HAZARD WARNING SWITCH (SECTION 0918-5b)
Y(I)
Y(I)
Y(I)
95
STEERING SWITCH (SECTION 0920-1c,2e,3f)
Y(I)
21
CRUISE CONTROL SWITCH (SECTION 0120-1)
Y(I)
129
CLUSTER SWITCH (SECTION 0922-1b)
Y(I)
90
CD PLAYER (SECTION 0920-1a,2c,3c)
WITH CD PLAYER
RELAY AND FUSE BLOCK (SECTION 0940-1a)
133
L(R)
C-39
C-39
L(R)
IG1 RELAY (SECTION 0940-1a)
132
R(F)
C-52
R
B
JB NO.1
C-55
R(R)
0940-102B
2P
2I
RBCM
3B
4B
4R
0940-102C
0940-102D
SB(R)
B(R)
B(R)
I
START STOP UNIT (SECTION 0940-1a)
G21